TI01439T/09/EN/02.20
71487252
2020-06-30

Technical Information
iTHERM CompactLine TM311

Compact thermometer, Pt100, 4-wire connection, class A
Optionally with integrated IO-Link and 4 to 20 mA transmitter, PC programmable

Applications

- Developed for universal use in hygienic and aseptic applications in the food & beverages and pharmaceutical industries, and for optimum standardization for machine and skid builders.
- Measuring range :−50 to +200 °C (−58 to +392 °F)
- Pressure range: up to 50 bar (725 psi)
- Protection class: IP69
- Output
  - Without electronics: Pt100 (4-wire connection)
  - With electronics: IO-Link, 4 to 20 mA, 1 x PNP switch output (depending on the type of connection)

Your benefits

Quick installation and easy commissioning:
- small, compact design, made entirely of stainless steel
- M12 connection with IP69 protection for easy electrical connection
- Pt100, 4-wire connection or self-detecting, universal output (IO-Link and 4 to 20 mA)
- Can also be ordered with preconfigured measuring range
- Recommended immersion lengths for optimum measurement at the highest level for standardization

Outstanding measurement properties thanks to innovative sensor technology:
- Extremely short response times
- Very accurate even with short immersion lengths
- Sensor-transmitter-matching increases measuring accuracy

Safe operation with certificates and approvals:
- Device safety according to EN 610101-1 and cCSAus
- Electromagnetic compatibility as per NAMUR NE21
- Diagnostics information can be selected according to NAMUR NE43
- Hygiene-compliant design with 3-A mark, EHEDG certification, ASME BPE conformity, FDA, EC 1935/2004, EN 2023/2006, TSE/ADI, GB4806-2016 and GB9685-2016
- Marine approval according to DNV GL

Endress+Hauser
People for Process Automation

About this document

Symbols

Symbols for certain types of information

Symbol	Meaning
	Permitted Procedures, processes or actions that are permitted.
	Preferred Procedures, processes or actions that are preferred.
	Forbidden Procedures, processes or actions that are forbidden.
	Tip Indicates additional information.
	Reference to documentation.
	Reference to page.
	Reference to graphic.
	Visual inspection.

Symbols in graphics

Symbol	Meaning	Symbol	Meaning
1, 2, 3,...	Item numbers	1., 2., 3....	Series of steps
A, B, C, ...	Views	**A-A, B-B, C-C, ...**	Sections
	Hazardous area		Safe area (non-hazardous area)

Function and system design

Measuring principle

Resistance thermometer (RTD):

This insert uses a Pt100 according to IEC 60751 as the temperature sensor. The temperature sensor is a temperature-sensitive platinum resistor with a resistance of 100 Ω at 0 °C (32 °F) and a temperature coefficient α = 0.003851 $°C^{-1}$.

Thin film resistance sensors (TF):

A very thin, ultrapure platinum layer, approx. 1 µm thick, is vaporized in a vacuum on a ceramic substrate and then structured photolithographically. The platinum conductor paths formed in this way create the measuring resistance. Additional covering and passivation layers are applied and reliably protect the thin platinum layer from contamination and oxidation, even at high temperatures. The primary advantages of thin film temperature sensors are their smaller sizes and better vibration resistance.

Measuring system

The compact thermometer measures the process temperature with a Pt100 sensor element (class A, 4-wire). An optional built-in transmitter converts the Pt100 input signal. The device with integrated electronics automatically detects the type of communication (IO-Link or 4 to 20 mA).

A broad portfolio of optimized components for the temperature measuring point is available to ensure seamless integration of the measuring point:
- Power supply unit/barrier
- Display units
- Overvoltage protection
- IO-Link master
- IO-Link configuration tool

For more detailed information, see the brochure "System Products and Data Managers - Solutions for the loop (FA00016K/EN)."

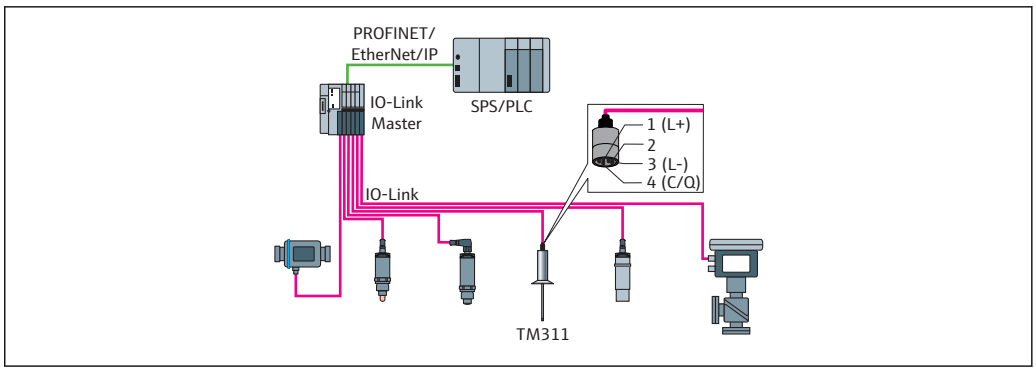

A0039767

1 M12 connection with IO-Link communication mode

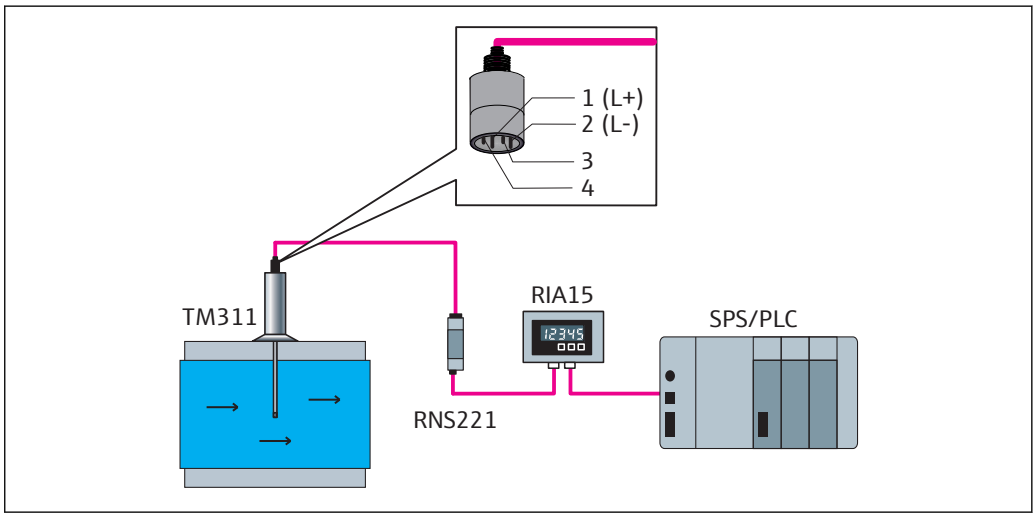

A0039765

2 M12 connection with 4 to 20 mA communication mode

Equipment architecture

Design		Options
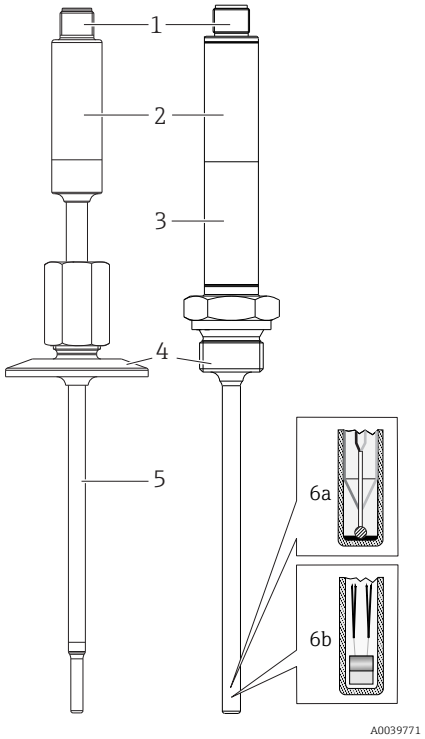	1: Electrical connection, output signal 2: Transmitter housing	**Your benefits:** ▪ M12, 4-pin connector, reduced cost and effort, incorrect wiring is prevented ▪ Optimum protection, IP69 as standard ▪ Compact, integrated transmitter (IO-Link and 4 to 20 mA)
	3: Extension neck	Optionally available if process temperature is too high for the electronics
	4: Process connection → 🗎 23	Over 50 different versions for industrial, hygienic and aseptic applications.
	5: Thermowell	▪ Versions with and without thermowell (insert in direct contact with process) ▪ Thermowell diameter 6 mm and optimized T-pieces and elbow pieces

	6: Insert with:
	6a: iTHERM TipSens
	6b: Pt100 (TF), basic
		Your benefits:
		▪ **iTHERM TipSens** - insert with shortest response times:
		  ▪ Insert: Ø3 mm (⅛ in) or Ø6 mm (¼ in)
		  ▪ Fast, highly accurate measurements, delivering maximum process safety and control
		  ▪ Quality and cost optimization
		  ▪ Minimization of necessary immersion length: better product protection thanks to improved process flow
		▪ **Pt100 (TF), basic**
		▪ Excellent cost-performance ratio

Input

Measuring range

Pt100 (TF) basic	−50 to +150 °C (−58 to +302 °F)
iTHERM TipSens	−50 to +200 °C (−58 to +392 °F)

Output

Output signal

Order code 020, option A

Sensor output	Pt100, 4-wire connection, class A

Order code 020, option B

Analog output	4 to 20 mA; variable measuring range
Digital output	C/Q (IO-Link or switch output)

Order code 020, option C

Analog output	4 to 20 mA; measuring range 0 to 150 °C (32 to 302 °F)
Digital output	C/Q (IO-Link or switch output)

Switching capacity

- 1 × PNP switch output
- Switch state ON Ia ≤ 200 mA; switch state OFF Ia ≤ 10 µA
- Switch cycles > 10 000 000
- Voltage drop PNP ≤ 2 V
- Overload protection
  - Automatic load testing of switching current
  - If a current of over 220 mA flows in the ON switch state, the device switches to a safe state
  - Diagnostic message **Overload at switch output**
- Switch functions
  - Hysteresis or window function
  - NC contact or NO contact
- No pull-down resistor is integrated in the device for the switch output.

Switch output

Response time ≤ 100 ms

Failure information

Failure information is generated if the measuring information is missing or not valid. The device displays the three diagnostic messages with the highest priority.

In the IO-Link mode, the device transmits all the failure information digitally.

In the 4 to 20 mA mode, the device transmits the failure information according to NAMUR NE43:

Switch output	The switch output switches to **open** in the fault state.

Underranging	Linear drop from 4.0 to 3.8 mA
Overranging	Linear increase from 20.0 to 20.5 mA
Failure e.g. sensor defective	≤ 3.6 mA (**low**) or ≥ 21 mA (**high**) can be selected The **high** alarm setting can be set between 21.5 mA and 23 mA, thus providing the flexibility needed to meet the requirements of various control systems.

Load

$R_{b\ max.} = (U_{b\ max.} - 10\ V) / 0.023\ A$ (current output)

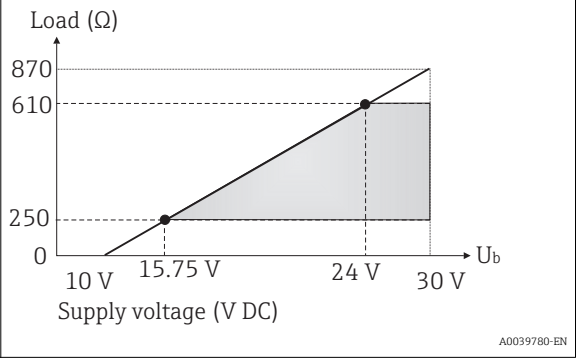

Linearization/transmission behavior

Temperature - linear

Damping

Configurable sensor input damping	0 to 120 s
Factory setting	0 s

Input current required

- ≤ 3.5 mA for 4 to 20 mA
- ≤ 9 mA for IO-Link

Maximum current consumption

≤ 23 mA for 4 to 20 mA

Switch-on delay

2 s

Protocol-specific data

IO-Link information

IO-Link is a point-to-point connection for communication between the device and an IO-Link master. The IO-Link communication interface enables direct access to the process and diagnostic data. It also provides the option of configuring the device while in operation.

The device supports the following features:

IO-Link specification	Version 1.1
IO-Link Smart Sensor Profile 2nd Edition	Supported: ▪ Identification ▪ Diagnosis ▪ Digital Measuring Sensor (as per SSP type 3.1)
SIO mode	Yes
Speed	COM2; 38.4 kBaud
Minimum cycle time	10 ms
Process data width	4 byte
IO-Link data storage	Yes
Block configuration according to V1.1	Yes
Device operational	The device is operational 0.5 s after the supply voltage has been applied (first valid measured value after 2 s)

Device description

In order to integrate field devices into a digital communication system, the IO-Link system needs a description of the device parameters, such as output data, input data, data format, data volume and supported transmission rate.

These data are available in the device description (IODD [1]) which is provided to the IO-Link master via generic modules when the communication system is commissioned.

The IODD can be downloaded as follows:
- Endress+Hauser: www.endress.com
- IODDfinder: ioddfinder.io-link.com

Write protection for device parameters

Software write protection is implemented using system commands.

Power supply

Supply voltage

Electronic version	Supply voltage
IO-Link/ 4 to 20 mA	U_b = 10 to 30 V_{DC}, protected against reverse polarity IO-Link communication is guaranteed only if the supply voltage is at least 15 V. If the supply voltage is < 15 V, the device displays a diagnostic message and deactivates the switch output.

The device must be operated with a type-examined transmitter power supply unit. Additional overvoltage protection is required for marine applications.

1) IO Device Description

Power supply failure

- To meet electrical safety according to CAN/CSA-C22.2 No. 61010-1 or UL 61010-1, the device may only be powered by a power supply unit with a limited energy electric circuit in accordance with UL/EN/IEC 61010-1 chapter 9.4 or Class 2 according to UL 1310, "SELV or Class 2 circuit".
- Behavior in the event of overvoltage (> 30 V)
  The device works continuously up to 35 V_{DC} without any damage. If the supply voltage is exceeded, the specified characteristics are no longer guaranteed.
- Behavior in the event of undervoltage
  If the supply voltage falls below the minimum value ~ 7 V, the device switches off in a defined manner (status as if not supplied with power).

Electrical connection

According to the 3-A Sanitary Standard and the EHEDG, electrical connecting cables must be smooth, corrosion-resistant and easy to clean.

M12 plug with 4 pins and "A" coding, in accordance with IEC 61076-2-101

▶ Do not overtighten the M12 plug, as this could damage the device. Maximum torque: 0.4 Nm (M12 knurl)

In the version with electronics, the device function is defined by the pin assignment of the M12 connector. Communication is either IO-Link or 4 to 20 mA.

IO-Link operating mode

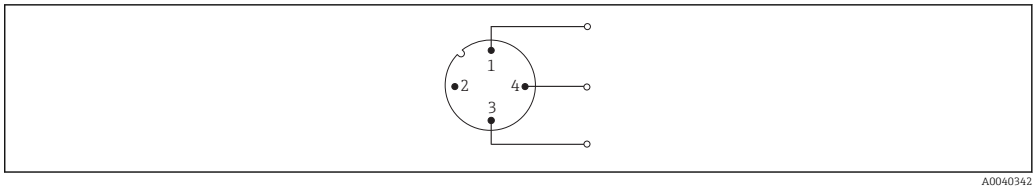

3 Pin assignment, device plug

1 *Pin 1 - power supply 15 to 30 V_{DC}*
2 *Pin 2 - not used*
3 *Pin 3 - power supply 0 V_{DC}*
4 *Pin 4 - C/Q (IO-Link or switch output)*

4 to 20 mA operating mode

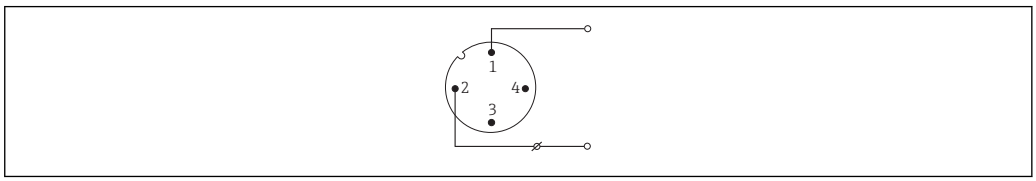

4 Pin assignment, device plug

1 *Pin 1 - power supply 10 to 30 V_{DC}*
2 *Pin 2 - power supply 0 V_{DC}*
3 *Pin 3 - not used*
4 *Pin 4 - not used*

Without electronics

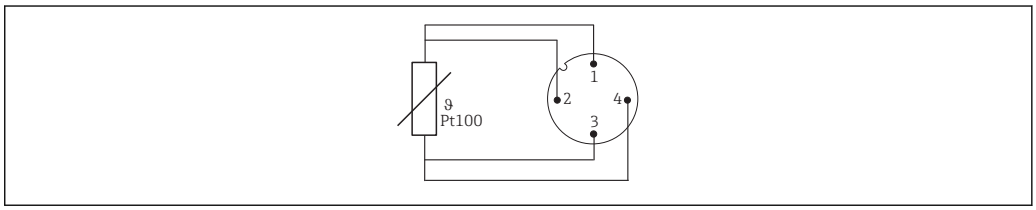

5 Pin assignment of device plug: Pt100, 4-wire connection

Overvoltage protection

To protect against overvoltage in the power supply and signal/communication cables for the thermometer electronics, the manufacturer offers the HAW562 surge arrester for DIN rail mounting.

For more detailed information, see Technical Information HAW562 surge arrester (TI01012K) .

Performance characteristics

Reference operating conditions

Adjustment temperature (ice bath)	0 °C (32 °F) for sensor
Ambient temperature range	25 °C ± 3 °C(77 °F ± 5 °F) for electronics
Supply voltage	24 V_{DC} ± 10 %
Relative humidity	< 95 %

Maximum measured error

According to DIN EN 60770 and reference conditions specified above. The measured error data correspond to ±2 σ (Gaussian distribution). The data include non-linearities and repeatability.

Measured error (according to IEC 60751) in °C = 0.15 + 0.002 |T|

|T| = Numerical value of the temperature in °C without regard to algebraic sign.

Thermometer without electronics

Standard	Designation	Measuring range	Measured error (±)	
			Maximum [1]	Based on measured value [2]
IEC 60751	Pt100 Cl. A	−50 to +200 °C (−58 to +392 °F)	0.55 °C (0.99 °F)	ME = ± (0.15 °C (0.27 °F) + 0.002% * |T|)

1) Maximum measured error for the specified measuring range.
2) Deviations from maximum measured error possible due to rounding.

Thermometer with electronics

Standard	Designation	Measuring range	Measured error (±)		
			Digital [1]		D/A [2]
			Maximum	Based on measured value	
IEC 60751	Pt100 Cl. A	−50 to +200 °C (−58 to +392 °F)	≤0.48 °C (0.86 °F)	ME = ± (0.215 °C (0.39 °F) + 0.134% * (MV - LRV))	0.05 % (≙ 8 µA)

1) Measured value transmitted via IO-Link.
2) Percentages based on the configured span of the analog output signal.

Thermometer with electronics and sensor-transmitter-matching / increased accuracy

Standard	Designation	Measuring range	Measured error (±)		
			Digital [1]		D/A [2]
			Maximum	Based on measured value	
IEC 60751	Pt100 Cl. A	−50 to +200 °C (−58 to +392 °F)	≤0.14 °C (025 °F)	ME = ± (0.127 °C (0.23 °F) + 0.0074% * (MV - LRV))	0.05 % (≙ 8 µA)

1) Measured value transmitted via IO-Link.
2) Percentages based on the configured span of the analog output signal.

MV = Measured value

LRV = Lower range value of relevant sensor

Total measured error of transmitter at current output = √(Measured error digital² + Measured error D/A²)

Sample calculation with Pt100, measuring range 0 to +150 °C (+32 to +302 °F), ambient temperature +25 °C (+77 °F), supply voltage 24 V and sensor-transmitter-matching:

Measured error digital = 0.127 °C (0.229 °F) + 0.0074 % x [150 °C (302 °F) - (−50 °C (−58 °F))]:	0.14 °C (0.25 °F)
Measured error D/A = 0.05 % x 150 °C (302 °F)	0.08 °C (0.14 °F)
Measured error digital value (IO-Link):	0.14 °C (0.25 °F)
Measured error analog value (current output): √(Measured error digital² + Measured error D/A²)	0.16 °C (0.29 °F)

Sample calculation with Pt100, measuring range 0 to +150 °C (+32 to +302 °F), ambient temperature +35 °C (+95 °F), supply voltage 30 V:

Measured error digital = 0.215 °C (0.387 °F)+ 0.134% x [150 °C (302 °F) - (−50 °C (−58 °F))]:	0.48 °C (0.86 °F)
Measured error D/A = 0.05 % x 150 °C (302 °F)	0.08 °C (0.14 °F)
Influence of ambient temperature (digital) = (35 - 25) x (0.004 % x 200 °C (360 °F)), min. 0.008 °C (0.014 °F)	0.08 °C (0.14 °F)
Influence of ambient temperature (D/A) = (35 - 25) x (0.003 % x 150 °C (302 °F))	0.05 °C (0.09 °F)
Influence of supply voltage (digital) = (30 - 24) x (0.004 % x 200 °C (360 °F)), min. 0.008 °C (0.014 °F)	0.05 °C (0.09 °F)
Influence of supply voltage (D/A) = (30 - 24) x (0.003 % x 150 °C (302 °F))	0.03 °C (0.05 °F)
Measured error digital value (IO-Link): √(Measured error digital² + Influence of ambient temperature (digital)² + Influence of supply voltage (digital)²	0.49 °C (0.88 °F)
Measured error analog value (current output): √(Measured error digital² + Measured error D/A² + Influence of ambient temperature (digital)² + Influence of ambient temperature (D/A)² + Influence of supply voltage (digital)² + Influence of supply voltage (D/A)²	0.50 °C (0.90 °F)

Long-term drift

	1 month	3 months	6 months	1 year	3 years	5 years
Digital output IO-Link	± 9 mK	± 15 mK	± 19 mK	± 23 mK	± 28 mK	± 31 mK
Current output Measuring range −50 to +200 °C (−58 to +360 °F)	± 2.5 µA	± 4.3 µA	± 5.4 µA	± 6.4 µA	± 8.0 µA	± 8.8 µA

Operating influences

The measured error data correspond to ±2 σσ (Gaussian distribution).

Standard	Designation	Ambient temperature Influence (+-) per 1 °C (1.8 °F) change			Supply voltage Influence (+-) per 1 V change		
		Digital [1]		D/A [2]	Digital [1]		D/A [2]
		Maximum [3]	Based on measured value [4]		Maximum [3]	Based on measured value [4]	
IEC 60751	Pt100 Cl. A	0.014 °C (0.025 °F)	0.004 % * (MV - LRV), min. 0.008 °C (0.0144 °F)	0.003 % (≙0.48 µA)	0.014 °C (0.025 °F)	0.004 % * (MV - LRV), min. 0.008 °C (0.0144 °F)	0.003 % (≙0.48 µA)

1) Measured value transmitted via IO-Link.
2) Percentages based on the configured span of the analog output signal.
3) Maximum measured error for the specified measuring range.
4) Deviations from maximum measured error possible due to rounding.

MV = Measured value

LRV = Lower range value of relevant sensor

Total measured error of transmitter at current output = √(Measured error digital² + Measured error D/A²)

Device temperature

The displayed device temperature has a maximum measured error of ±8 K.

Response time T_{63} and T_{90}

Tests in water at 0.4 m/s (1.3 ft/s) according to IEC 60751; temperature changes in increments of 10 K. Response times measured for the version without electronics.

Response time without heat transfer paste

Design	Sensor	t63	t_{90}
6 mm direct contact, straight tip	Pt100 (TF) basic	5 s	< 20 s
6 mm direct contact, straight tip	iTHERM TipSens	1 s	1.5 s
6 mm thermowell, straight tip (4.3 × 20 mm)	iTHERM TipSens	1 s	3 s

Response time with heat transfer paste [1)]

Design	Sensor	t63	t_{90}
6 mm thermowell, straight tip (4.3 × 20 mm)	iTHERM TipSens	1 s	2.5 s

1) Between the insert and the thermowell

Electronics response time

Max. 1 s

When recording step responses, it is important to bear in mind that the response times of the sensor might be added to the specified times.

Sensor current

≤ 1 mA

Calibration

Calibration of thermometers
Calibration involves comparing the measured values of a device under test (DUT) with those of a more precise calibration standard using a defined and reproducible measurement method. The aim is to determine the deviation of the DUT's measured values from the true value of the measured variable. Two different methods are used for thermometers:
- Calibration at fixed-point temperatures, e.g. at the freezing point of water at 0 °C
- Calibration compared against a precise reference thermometer

The thermometer to be calibrated must display the fixed point temperature or the temperature of the reference thermometer as accurately as possible. Temperature-controlled calibration baths with very homogeneous thermal values, or special calibration furnaces into which the DUT and the reference thermometer, where necessary, can project to a sufficient degree, are typically used for thermometer calibrations.

Sensor-transmitter-matching
The resistance/temperature curve of platinum resistance thermometers is standardized but in practice it is rarely possible to keep to the values precisely over the entire operating temperature range. For this reason, platinum resistance sensors are divided into tolerance classes, such as class A, AA or B as per IEC 60751. These tolerance classes describe the maximum permissible deviation of the specific sensor characteristic curve from the standard curve, i.e. the maximum temperature-dependent characteristic error that is permitted. The conversion of measured sensor resistance values at temperatures in temperature transmitters or other meter electronics is often susceptible to considerable errors as the conversion is generally based on the standard characteristic curve.

When temperature transmitters are used, this conversion error can be reduced significantly by sensor-transmitter-matching:
- Calibration at least at three temperatures and determination of the actual temperature sensor characteristic curve
- Adjustment of the sensor-specific polynomial function using appropriate Calendar-van-Dusen (CvD) coefficients
- Configuration of the temperature transmitter with the sensor-specific CvD coefficients for resistance/temperature conversion, and
- another calibration of the reconfigured temperature transmitter with the connected resistance thermometer

The manufacturer offers this sensor-transmitter-matching as a separate service. Furthermore, the sensor-specific polynomial coefficients of platinum resistance thermometers are indicated on every calibration protocol where possible, e.g. at least three calibration points.

For the device, the manufacturer offers standard calibrations at a reference temperature of −50 to +200 °C (−58 to +392 °F) based on the ITS90 (International Temperature Scale). Calibrations in other temperature ranges are available from your local sales center on request. Calibrations are traceable to national and international standards. The calibration certificate is referenced to the serial number of the device.

Mounting

Orientation

No restrictions. However, self-draining in the process must be guaranteed. If there is an opening to detect leaks at the process connection, this opening must be at the lowest possible point.

Installation instructions

The immersion length of the compact thermometer can considerably influence the accuracy. If the immersion length is too short, measurement errors can occur as a result of heat conduction via the process connection and the vessel wall. If installing in a pipe, the immersion length should ideally correspond to half of the pipe diameter.

Installation possibilities: pipes, tanks or other plant components.

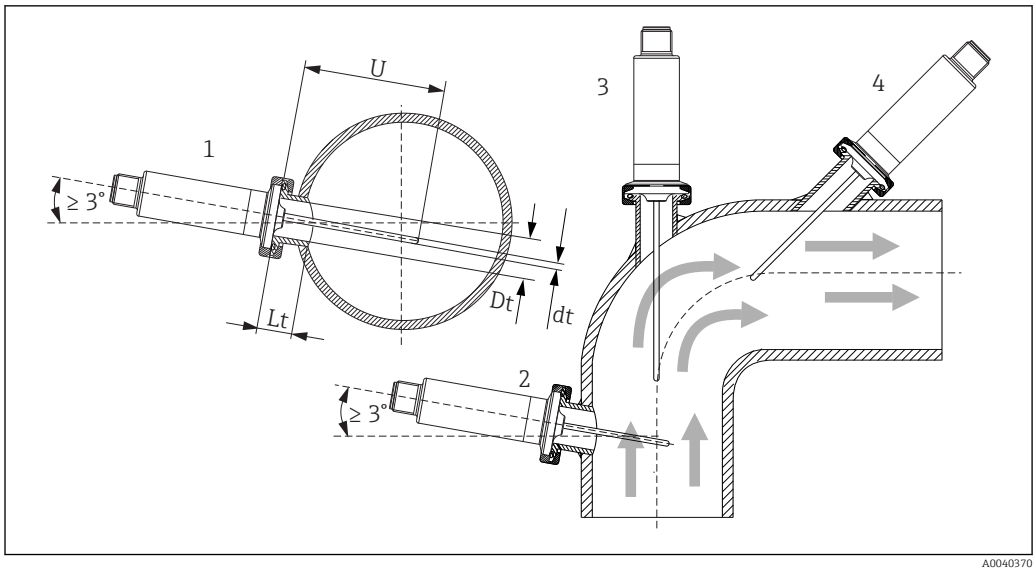

6 Installation examples

1, 2 Perpendicular to flow direction, installed at a min. angle of 3 ° to ensure self-draining
3 On elbows
4 Inclined installation in pipes with a small nominal diameter
U Immersion length

The requirements of the EHEDG and the 3-A Sanitary Standard must be adhered to.

Installation instructions EHEDG/cleanability: Lt ≤ (Dt-dt)

Installation instructions 3-A/cleanability: Lt ≤ 2 (Dt-dt)

In the case of pipes with a small nominal diameter, it is advisable for the tip of the thermometer to project well into the process so that it extends past the pipe axis. Installation at an angle (4) could be another solution. When determining the immersion length or installation depth all the parameters of the thermometer and of the medium to be measured must be taken into account (e.g. flow velocity, process pressure).

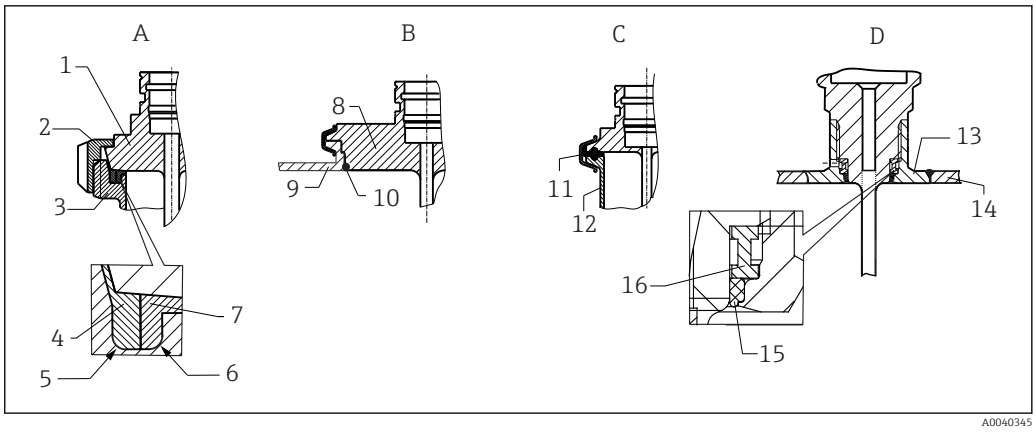

7 *Detailed installation instructions for hygiene-compliant installation*

A Milk pipe connection according to DIN 11851, only in connection with EHEDG certified and self-centering sealing ring
1 Sensor with milk pipe connection
2 Groove slip-on nut
3 Counterpart connection
4 Centering ring
5 R0.4
6 R0.4
7 Sealing ring
B Varivent® process connection for VARINLINE® housing
8 Sensor with Varivent connection
9 Counterpart connection
10 O-ring
C Clamp according to ISO 2852
11 Molded seal
12 Counterpart connection
D Process connection Liquiphant-M G1", horizontal installation
13 Weld-in adapter
14 Vessel wall
15 O-ring
16 Thrust collar

NOTICE

The following actions must be taken if a sealing ring (O-ring) or seal fails:

- The thermometer must be removed.
- The thread and the O-ring joint/sealing surface must be cleaned.
- The sealing ring or seal must be replaced.
- CIP must be performed after installation.

In the case of weld-in connections, exercise the necessary degree of care when performing the welding work on the process side:

1. Use suitable welding material.
2. Flush-weld or weld with welding radius ≥ 3.2 mm (0.13 in).
3. Avoid crevices, folds or gaps.
4. Ensure the surface is honed and polished, Ra ≤ 0.76 µm (30 µin).

Pay attention to the following when installing the thermometer to ensure that the cleanability is not affected:

1. The installed sensor is suitable for CIP (cleaning in place). Cleaning is performed together with the pipe or tank. In the case of internal tank fixtures using process connection nozzles, it is important to ensure that the cleaning assembly directly sprays this area so that it is cleaned properly.
2. The Varivent® couplings enable flush-mount installation.

Environment

Ambient temperature range

T_a	−40 to +85 °C (−40 to +185 °F)

Storage temperature

T_s	−40 to +85 °C (−40 to +185 °F)

Operating altitude

Up to 2 000 m (6 600 ft) above sea level

Climate class

As per IEC/EN 60654-1, Class Dx

Degree of protection

As per IEC/EN 60529 IP69

Depends on the degree of protection of the connection cable → 36

Shock and vibration resistance

The thermometer meets the requirements of IEC 60751, which specifies shock and vibration resistance of 3 g in the 10 to 500 Hz range.

Electromagnetic compatibility (EMC)

EMC in accordance with all the relevant requirements of the IEC/EN 61326 series and NAMUR Recommendation EMC (NE21). For details, refer to the Declaration of Conformity.

- Maximum measured error under EMC tests: < 1 % of the span
- Interference immunity according to IEC/EN 61326 series, requirements for industrial fields
- Interference emission according to IEC/EN 61326 series, Class B equipment

IO-Link

Only the requirements of IEC/EN 61131-9 are met in I/O-Link mode.

The connection between the IO-Link master and thermometer is via an unshielded 3-wire cable, maximum 20 m (65.6 ft) in length.

4 to 20 mA

Electromagnetic compatibility in accordance with all the relevant requirements of the IEC/EN 61326 series and NAMUR Recommendation EMC (NE21).

For more information, see the Declaration of Conformity.

1. With a connection cable length of 30 m (98.4 ft):
   always use a shielded cable.
2. The use of shielded connection cables is generally recommended.

Electrical safety

- Protection class III
- Overvoltage category II
- Pollution level 2

Process

Process temperature range

The thermometer electronics must be protected against temperatures over 85 °C (185 °F) by an extension neck of the appropriate length.

Device version without electronics (order code 020, option A)

Pt100 TF, basic, without extension neck	−50 to +150 °C (−58 to +302 °F)
Pt100 TF, basic, with extension neck	−50 to +150 °C (−58 to +302 °F)

iTHERM TipSens, without extension neck	−50 to +200 °C (−58 to +392 °F)
iTHERM TipSens, with extension neck	−50 to +200 °C (−58 to +392 °F)

Device version with electronics (order code 020, option B, C)

Pt100 TF, basic, without extension neck	−50 to +150 °C (−58 to +302 °F)
Pt100 TF, basic, with extension neck	−50 to +150 °C (−58 to +302 °F)
iTHERM TipSens, without extension neck	−50 to +150 °C (−58 to +302 °F)
iTHERM TipSens, with extension neck	−50 to +200 °C (−58 to +392 °F)

Thermal shock

Thermal shock resistance in CIP/SIP process with a temperature increase from +5 to +130 °C (+41 to +266 °F) within 2 seconds.

Process pressure range

The maximum possible process pressure depends on various influencing factors, such as the design, process connection and process temperature. Maximum possible process pressures for the individual process connections. → 📄 23

It is possible to verify the mechanical loading capacity as a function of the installation and process conditions using the online TW Sizing Module for thermowells in the Endress+Hauser Applicator software . → 📄 32

Medium - state of aggregation

Gaseous or liquid (also with high viscosity, e.g. yogurt).

Mechanical construction

Design, dimensions

All dimensions in mm (in). The design of the thermometer depends on the thermowell version used:
- Thermometer without a thermowell
- Thermowell diameter 6 mm (¼ in)
- T-piece and elbow piece thermowell version as per DIN 11865/ASME BPE 2012 for weld-in

Various dimensions, such as the immersion length U for example, are variable values and are therefore indicated as items in the following dimensional drawings.

Variable dimensions:

Item	Description
B	Thermowell bottom thickness
E	Extension neck length, optional
T	Length of thermowell lagging, pre-defined, depending on the thermowell version
U	Variable immersion length, depending on the configuration

Without thermowell

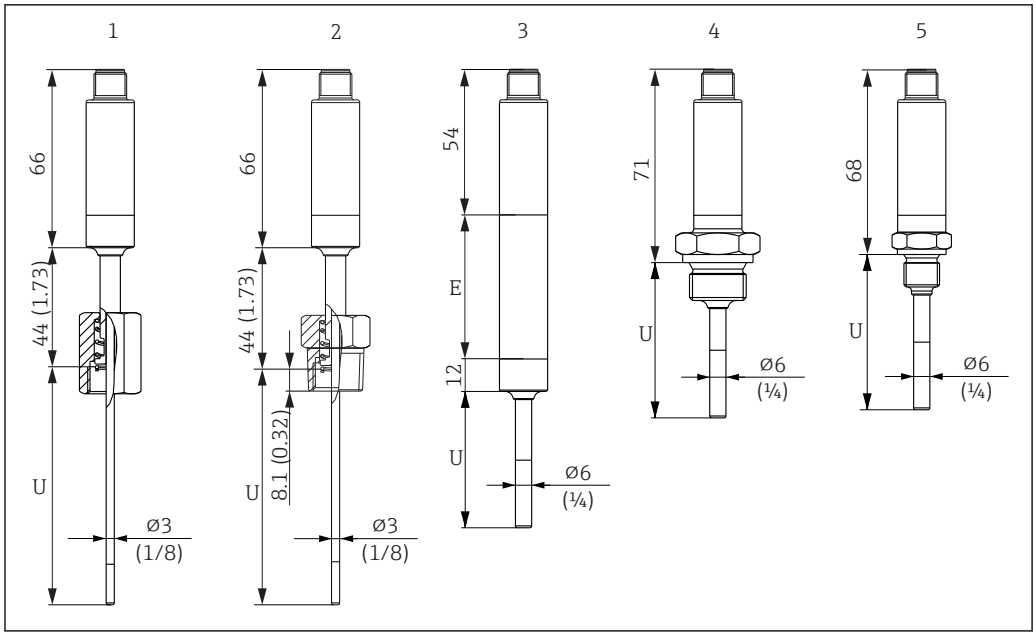

A0040023

1 *Thermometer with spring-loaded cap-nut, G3/8" thread 3 mm for existing thermowell*
2 *Thermometer with spring-loaded NPT½" male thread 3 mm for existing thermowell*
3 *Thermometer without process connection for compression fitting, with extension neck*
4 *Thermometer with G½" male thread*
5 *Thermometer with G¼" male thread*

Pay attention to the following equations when calculating the immersion length U for an existing thermowell:

Version 1 (G3/8" cap-nut)	$U = U_{(thermowell)} + T_{(thermowell)} + 3\ mm - B_{(thermowell)}$
Version 2 (NPT½" male thread)	$U = U_{(thermowell)} + T_{(thermowell)} - 5\ mm$ (-8 mm screw-in depth + 3mm spring travel) $- B_{(thermowell)}$

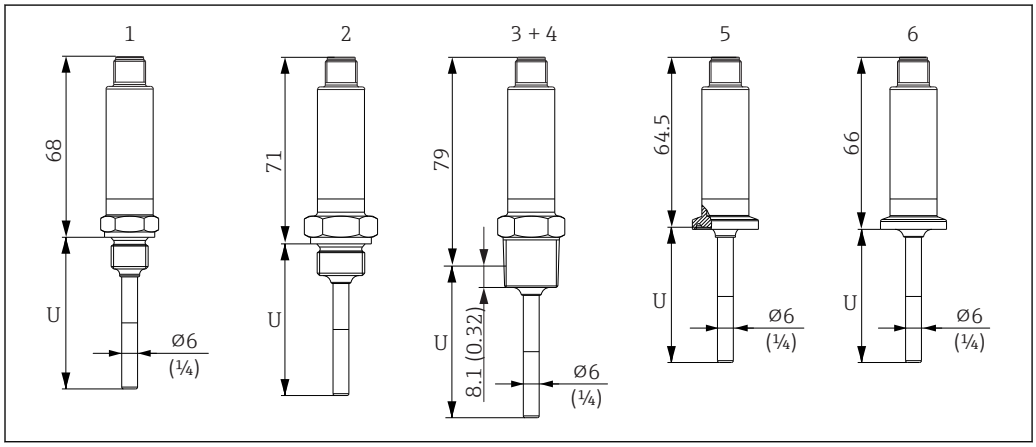

A0040267

1 *Thermometer with M14 male thread*
2 *Thermometer with M18 male thread*
3 *Thermometer with NPT½" male thread*
4 *Thermometer with NPT¼" male thread*
5 *Thermometer with Microclamp, DN18 (0.75")*
6 *Thermometer with Tri-Clamp, DN18 (0.75")*

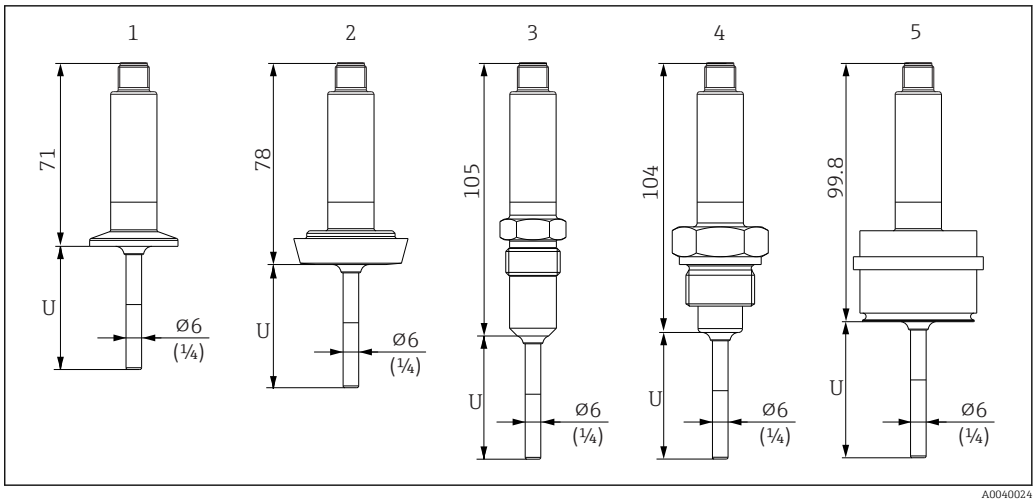

A0040024

1 *Thermometer with Clamp ISO2852 for DN12 to 21.3, DN25 to 38, DN40 to 51*
2 *Thermometer with milk pipe connection DIN11851 for DN25/DN32/DN40/DN50*
3 *Thermometer with metal sealing system G½"*
4 *Thermometer with G¾" male thread ISO228 for FTL31/33/20/50 Liquiphant adapter*
5 *Thermometer with D45 process adapter*

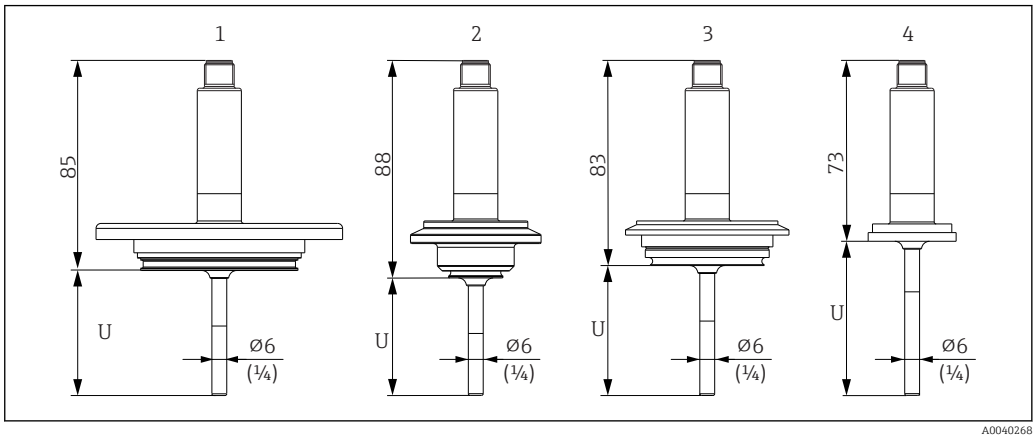

A0040268

1 *Thermometer with APV in-line, DN50*
2 *Thermometer with Varivent type B, D 31 mm*
3 *Thermometer with Varivent type F, D 50 mm and Varivent type N, D 68 mm*
4 *Thermometer with SMS 1147, DN25/DN38/DN51*

With compression fitting

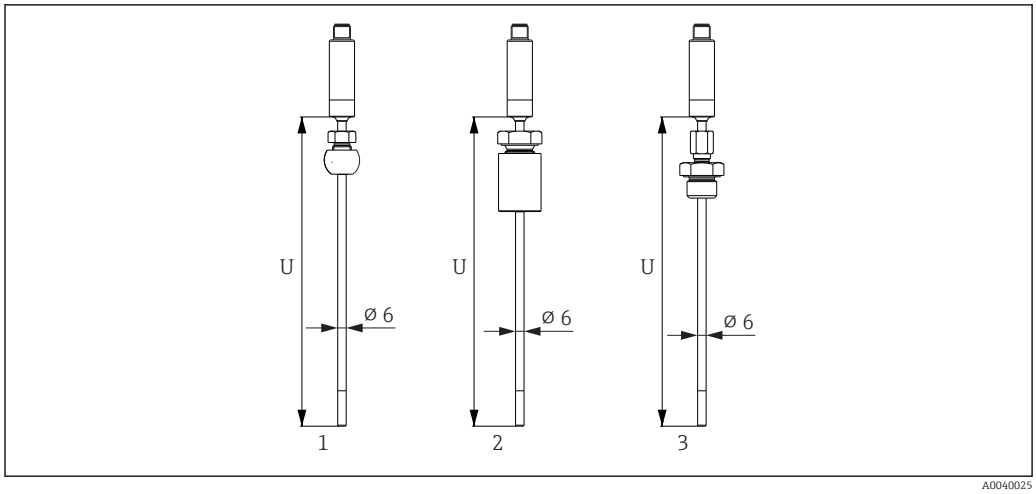

1 *Thermometer with TK40 compression fitting, spherical, PEEK/316L, ferrule, Ø 25 mm, for weld-in*
2 *Thermometer with TK40 compression fitting, cylindrical, Elastosil ferrule, Ø 25 mm, for weld-in*
3 *Thermometer with compression fitting G½" male thread, TK40-BADA3C, 316L*

With thermowell diameter 6 mm (¼ in)

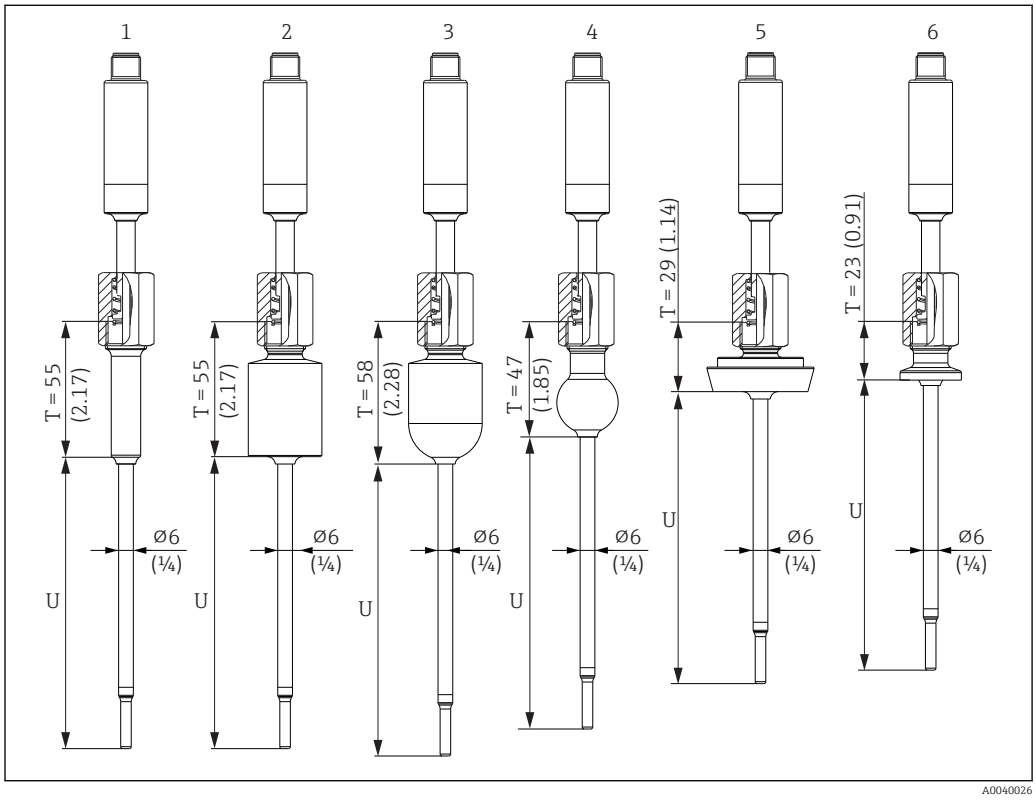

1 *Thermometer with weld-in adapter, cylindrical, D 12 × 40 mm40mm*
2 *Thermometer with weld-in adapter, cylindrical, D 30 x 40 mm*
3 *Thermometer with weld-in adapter, spherical-cylindrical, D 30 x 40 mm*
4 *Thermometer with weld-in adapter, spherical, D 25 mm*
5 *Thermometer with milk pipe connection DIN11851, DN25/DN32/DN40*
6 *Thermometer with Microclamp, DN18 (0.75")*

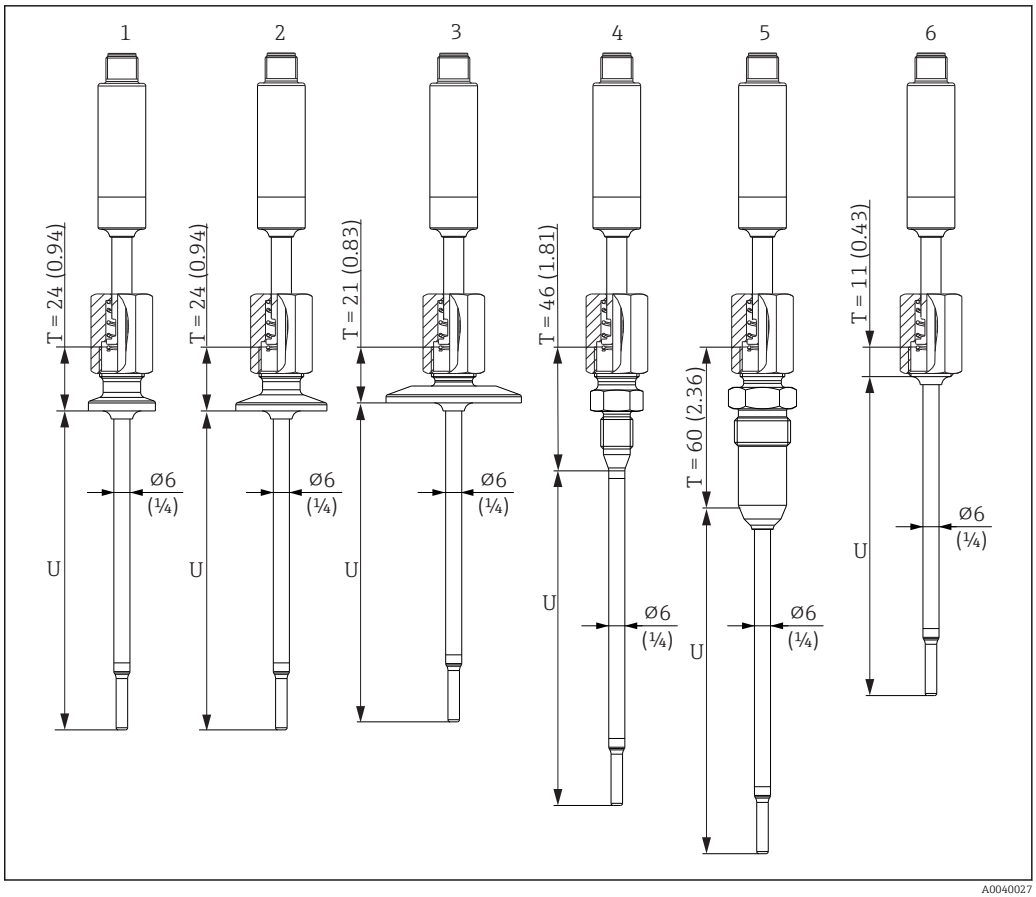

A0040027

1 *Thermometer with Tri-Clamp version DN18*
2 *Thermometer with Clamp version DN12 to 21.3*
3 *Thermometer with Clamp version DN25 to 38/DN40 to 51*
4 *Thermometer with metal sealing system version, M12 × 1.5*
5 *Thermometer with metal sealing system version, G½"*
6 *Thermometer without process connection*

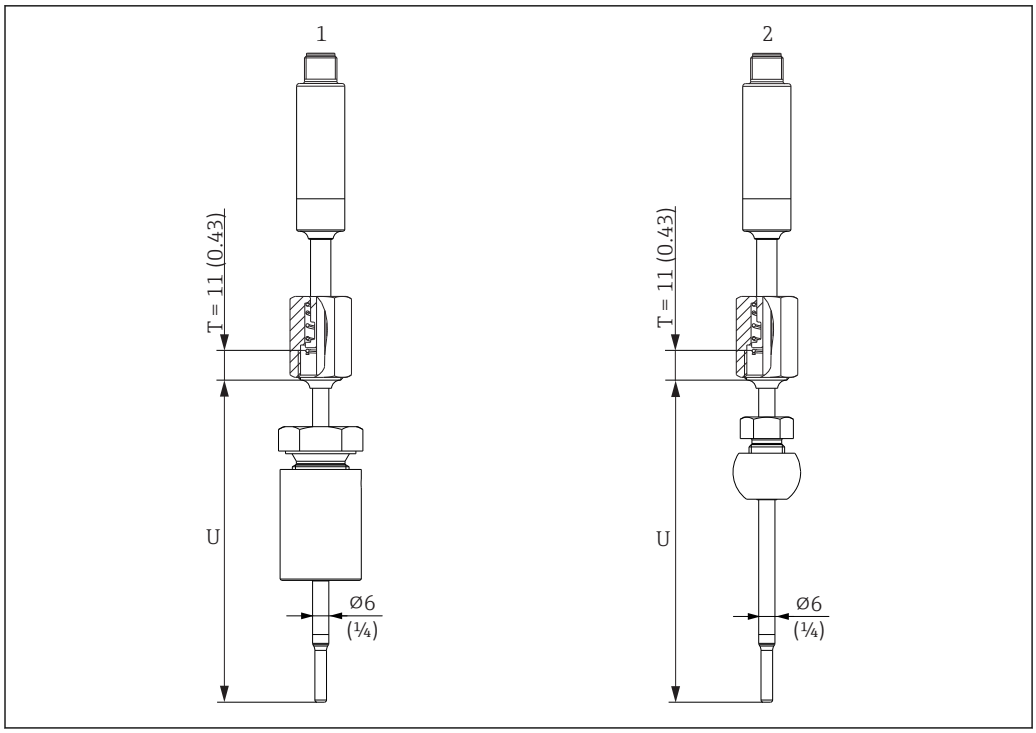

1 *Thermometer with TK40 compression fitting, cylindrical, Elastosil ferrule, Ø30 mm, for weld-in*
2 *Thermometer with TK40 compression fitting, spherical, PEEK/316L ferrule, Ø25 mm, for weld-in*

Thermowell version as T-piece or elbow piece

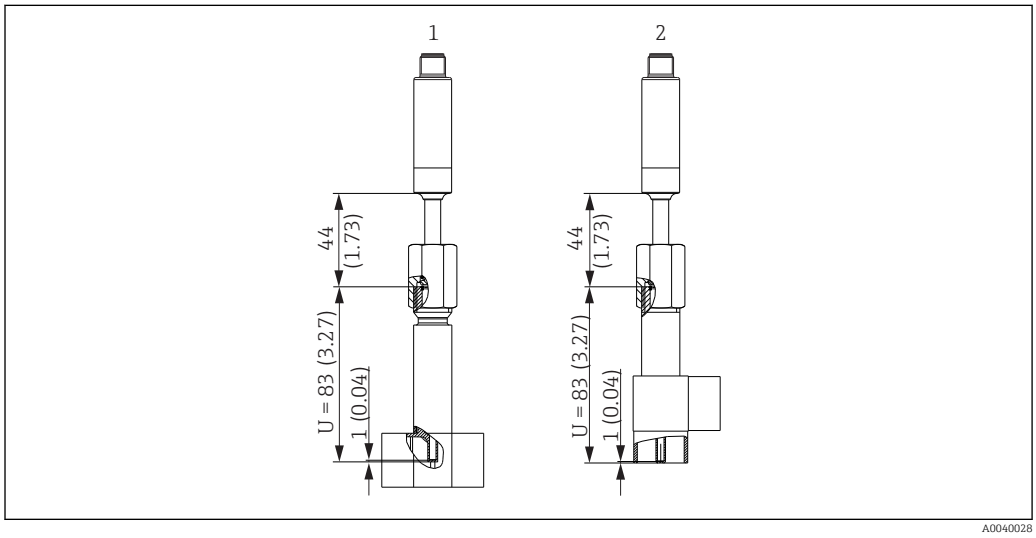

1 *Thermometer with thermowell as T-piece*
2 *Thermometer with thermowell as elbow piece*

- Pipe sizes as per DIN 11865 series A (DIN), B (ISO) and C (ASME BPE)
- 3-A mark for nominal diameters ≥ DN25
- IP69 protection
- 1.4435+316L material, delta ferrite content < 0.5%
- Temperature range −60 to +200 °C (−76 to +392 °F)
- Pressure range PN25 as per DIN11865

Due to the short immersion length U in the case of small pipe diameters, the use of iTHERM TipSens inserts is recommended.

Possible combinations of the thermowell versions with the available process connections

Process connection and size	Direct contact,6 mm (¼ in)	Thermowell,6 mm (¼ in)
Without process connection (for installation with compression fitting)	☑	☑
Process adapter D45	☑	-
Compression fitting		
Thread G½"	☑	☑
Cylindrical Ø30 mm	☑	☑
Spherical Ø25 mm	☑	☑
Thread		
G½"	☑	-
G¼"	☑	-
M14x1.5	☑	-
M18x1.5	☑	-
NPT½"	☑	-
Weld-in adapter		
Cylindrical Ø30 x 40 mm	-	☑
Cylindrical Ø12 x 40 mm	-	☑
Spherical-cylindrical Ø30 x 40 mm	-	☑
Spherical Ø25 mm (0.98 in)	-	☑
Clamps according to ISO 2852		
Microclamp/Tri-clamp DN18 (0.75 in)	☑	☑
DN12 - 21.3	☑	☑
DN25 -38 (1 - 1.5 in)	☑	☑
DN40 - 51 (2 in)	☑	☑
Milk pipe connection as per DIN 11851		
DN25	☑	☑
DN32	☑	☑
DN40	☑	☑
DN50	☑	-
Metal sealing system		
M12x1	-	☑
G½"	☑	☑
Thread according to ISO 228 for Liquiphant weld-in adapter		
G¾" for FTL20, FTL31, FTL33	☑	-
G¾" for FTL50	☑	-
G1" for FTL50	☑	-
APV Inline		
DN50	☑	-
Varivent®		
Type B, Ø31 mm	☑	-
Type F, Ø50 mm	☑	-
Type N, Ø68 mm	☑	-
SMS 1147		

Process connection and size	Direct contact,6 mm (¼ in)	Thermowell,6 mm (¼ in)
DN25	☑	-
DN38	☑	-
DN51	☑	-

Weight

0.2 to 2.5 kg (0.44 to 5.5 lbs) for standard versions

Material

The temperatures for continuous operation specified in the following table are only intended as reference values for use of the various materials in air and without any significant compressive load. The maximum operating temperatures can be reduced considerably in cases where abnormal conditions such as high mechanical load occur or in aggressive media.

Identifier	Short form	Recommended max. temperature for continuous use in air	Features
AISI 316L (corresponds to 1.4404 or 1.4435)	X2CrNiMo17-13-2, X2CrNiMo18-14-3	650 °C (1 202 °F) [1]	▪ Austenitic, stainless steel ▪ High corrosion resistance in general ▪ Particularly high corrosion resistance in chlorine-based and acidic, non-oxidizing atmospheres through the addition of molybdenum (e.g. phosphoric and sulfuric acids, acetic and tartaric acids with a low concentration) ▪ Increased resistance to intergranular corrosion and pitting
1.4435+316L, delta ferrite < 1 %	With regard to analytical limits, the specifications of both materials (1.4435 and 316L) are met simultaneously. In addition, the delta ferrite content of the wetted parts is limited to< 1 % - including the welding seams (following Basel Standard 2).		

1) Can be used to a limited extent up to 800 °C (1472 °F) for low compressive loads and in non-corrosive media. More information is available from the sales organization.

Surface roughness

Values for wetted surfaces:

Standard surface, mechanically polished [1]	R_a ≤ 0.76 µm (30 µin)
Mechanically polished [1], buffed [2]	R_a ≤ 0.38 µm (15 µin)
Mechanically polished [1], buffed and electropolished	R_a ≤ 0.38 µm (15 µin)+ electropolished

1) Or equivalent treatment that guarantees R_a max
2) Not compliant with ASME BPE

Process connections

Compression fitting

Type TK40	Version	Dimensions			Technical properties
		Ødi	L	Across flats	
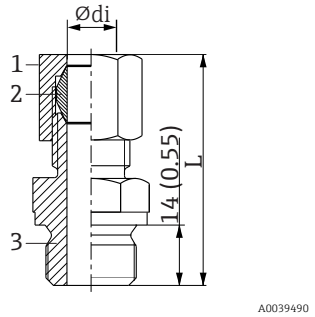 *1 Nut* *2 Clamping sleeve* *3 Process connection*	G ½" , ferrule material 316L	6 mm (0.24 in)	Approx. 47 mm (1.85 in)	G½": 27 mm (1.06 in)	▪ $P_{max.}$ = 40 bar (104 psi) at T = +200 °C (+392 °F) for 316L ▪ $P_{max.}$ = 25 bar (77 psi) at T = +400 °C (+752 °F) for 316L Tightening torque = 40 Nm

Type TK40 for weld-in	Version	Dimensions			Technical properties [1]
	Spherical or cylindrical	Ødi	ØD	h	
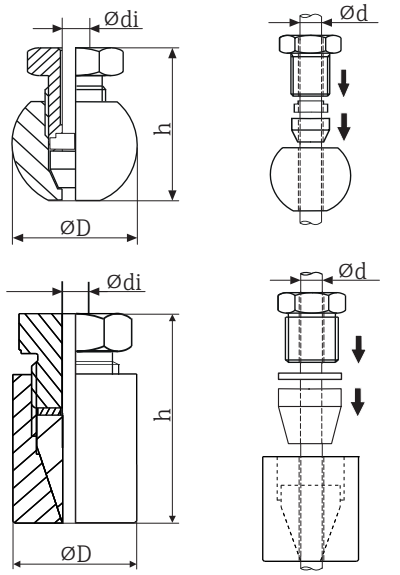	Spherical Material of sealing taper PEEK or 316L Thread G¼"	6.3 mm (0.25 in) [2]	25 mm (0.98 in)	33 mm (1.3 in)	▪ $P_{max.}$ = 10 bar (145 psi) ▪ $T_{max.}$ for PEEK sealing taper = +150 °C (+302 °F), tightening torque = 10 Nm ▪ $P_{max.}$ = 50 bar (725 psi) ▪ $T_{max.}$ for 316L sealing taper = +200 °C (+392 °F), tightening torque = 25 Nm ▪ The TK40 PEEK sealing taper is EHEDG tested and 3-A marked
	Cylindrical Sealing taper material Elastosil® Thread G½"	6.2 mm (0.24 in) [2]	30 mm (1.18 in)	57 mm (2.24 in)	▪ $P_{max.}$ = 10 bar (145 psi) ▪ $T_{max.}$ for Elastosil® sealing taper = +150 °C (+302 °F), tightening torque = 5 Nm ▪ The TK40 Elastosil sealing taper is EHEDG tested and 3-A marked

1) All the pressure specifications apply for cyclic temperature load
2) For insert or thermowell diameter Ød = 6 mm (0.236 in).

Releasable process connection

Type	Version G	Dimensions			Technical properties
		L1 thread length	A	Across flats	
Thread 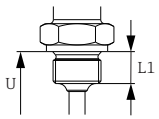	G¼" ISO228	16 mm (0.63 in)	25.5 mm (1 in)	32	▪ $P_{max.}$ = 25 bar (362 psi) at max. 150 °C (302 °F) ▪ $P_{max.}$ = 40 bar (580 psi) at max. 100 °C (212 °F)
	G½" ISO228				
	M14x1.5	18.6 mm (0.73 in)	29.5 mm (1.16 in)	41	

Type	Version G	Dimensions			Technical properties
		L1 thread length	A	Across flats	
	M18x1.5				
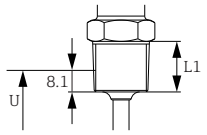	½" NPT ANSI				

Type	Version	Dimensions		Technical properties
	Φd [1]	ΦD	Φa	
Clamp according to ISO 2852 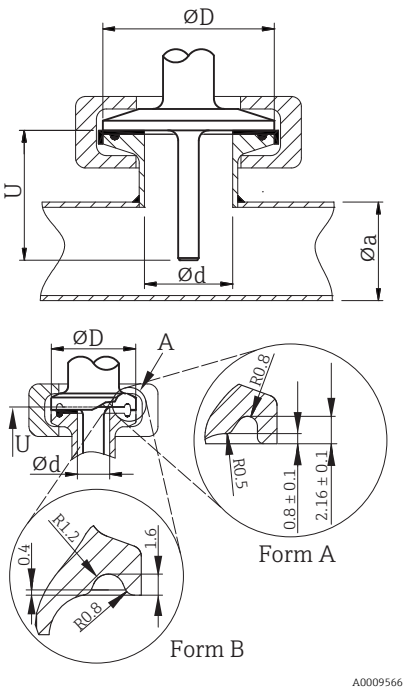 *A Different seal geometries for Microclamp and Tri-clamp*	Microclamp [2] DN8-18 (0.5"-0.75") [3]	25 mm (0.98 in)	-	▪ $P_{max.}$ = 16 bar (232 psi), depends on clamp ring and suitable seal ▪ 3-A marked
	Tri-clamp DN8-18 (0.5"-0.75") [3]		-	
	DN12-21.3	34 mm (1.34 in)	16 to 25.3 mm (0.63 to 0.99 in)	▪ $P_{max.}$ = 16 bar (232 psi), depends on clamp ring and suitable seal ▪ 3-A marked and EHEDG certified (in connection with Combifit seal) ▪ ASME BPE compliance
	DN25-38 (1"-1.5")	50.5 mm (1.99 in)	29 to 42.4 mm (1.14 to 1.67 in)	
	DN40-51 (2")	64 mm (2.52 in)	44.8 to 55.8 mm (1.76 to 2.2 in)	

1) Pipes in accordance with ISO 2037 and BS 4825 Part 1
2) Microclamp (not in ISO 2852); no standard pipes
3) DN8 (0.5") only possible with thermowell diameter = 6 mm (¼ in)

Type	Technical properties
Milk pipe connection according to DIN 11851 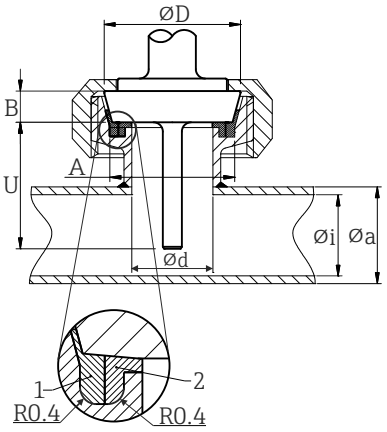 *1 Centering ring* *2 Sealing ring*	▪ 3-A marked and EHEDG certified (only with EHEDG certified and self-centering sealing ring) ▪ ASME BPE compliance

Version [1]	Dimensions					$P_{max.}$
	ΦD	A	B	Φi	Φa	
DN25	44 mm (1.73 in)	30 mm (1.18 in)	10 mm (0.39 in)	26 mm (1.02 in)	29 mm (1.14 in)	40 bar (580 psi)
DN32	50 mm (1.97 in)	36 mm (1.42 in)	10 mm (0.39 in)	32 mm (1.26 in)	35 mm (1.38 in)	40 bar (580 psi)
DN40	56 mm (2.2 in)	42 mm (1.65 in)	10 mm (0.39 in)	38 mm (1.5 in)	41 mm (1.61 in)	40 bar (580 psi)
DN50	68 mm (2.68 in)	54 mm (2.13 in)	11 mm (0.43 in)	50 mm (1.97 in)	53 mm (2.1 in)	25 bar (363 psi)

1) Pipes in accordance with DIN 11850

Type		Version	Technical properties
Metal sealing system		Thermowell diameter 6 mm (¼ in)	$P_{max.}$ = 16 bar (232 psi) Maximum torque = 10 Nm (7.38 lbf ft)
M12x1.5	**G½"**		
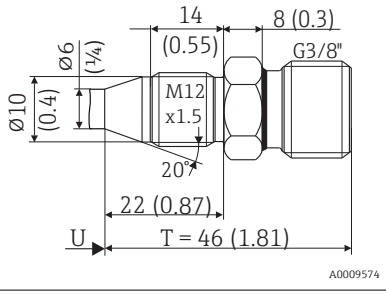 	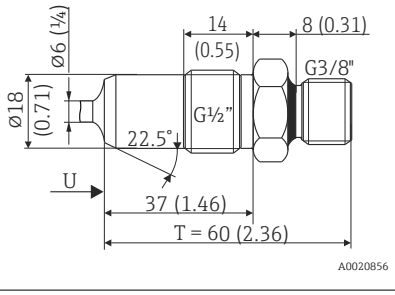 		

Type	Version G	Dimensions			Technical properties
		L1 thread length	A	1 (SW/AF)	
Thread according to ISO 228 (for Liquiphant weld-in adapter) 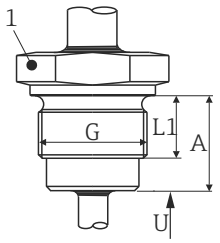 	G¾" for FTL20/31/33 adapter	16 mm (0.63 in)	25.5 mm (1 in)	32	▪ $P_{max.}$ = 25 bar (362 psi) at max. 150 °C (302 °F) ▪ $P_{max.}$ = 40 bar (580 psi) at max. 100 °C (212 °F) ▪ 3-A marked and EHEDG tested ▪ ASME BPE compliance
	G¾" for FTL50 adapter				
	G1" for FTL50 adapter	18.6 mm (0.73 in)	29.5 mm (1.16 in)	41	

Type	Version	Technical properties
Process adapter 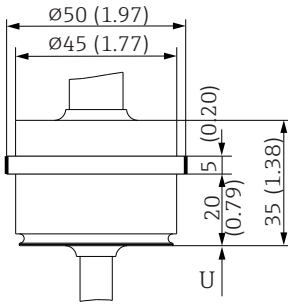 	D45	

For welding in

Type	Version	Dimensions	Technical properties
Weld-in adapter 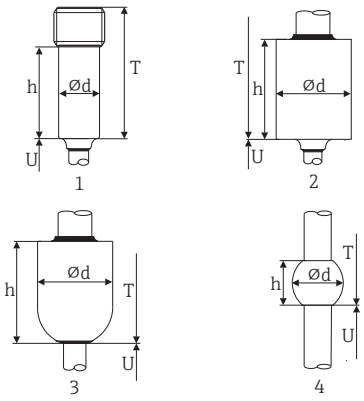 	1: Cylindrical	Φd x h = 12 mm (0.47 in) x 40 mm (1.57 in), T = 55 mm (2.17 in)	▪ $P_{max.}$ depends on the weld-in process ▪ 3-A marked and EHEDG certified ▪ ASME BPE compliance
	2: Cylindrical	Φd x h = 30 mm (1.18 in) x 40 mm (1.57 in)	
	3: Spherical-cylindrical	Φd x h = 30 mm (1.18 in) x 40 mm (1.57 in)	
	4: Spherical	Φd = 25 mm (0.98 in) h = 24 mm (0.94 in)	

Type	Version	Dimensions					Technical properties
		Φd	ΦA	ΦB	M	h	
APV Inline 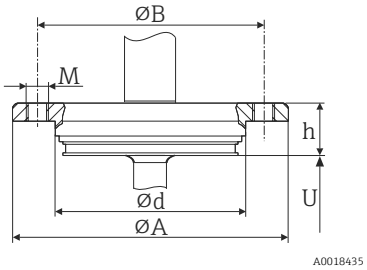 	DN50	69 mm (2.72 in)	99.5 mm (3.92 in)	82 mm (3.23 in)	2xM8	19 mm (0.75 in)	▪ $P_{max.}$ = 25 bar (362 psi) ▪ 3-A marked and EHEDG certified ▪ ASME BPE compliance

Type	Version	Dimensions				Technical properties	
		ΦD	ΦA	ΦB	h	$P_{max.}$	
Varivent® 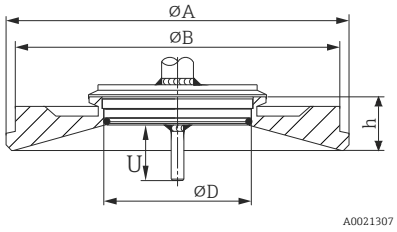 	Type B	31 mm (1.22 in)	105 mm (4.13 in)	-	22 mm (0.87 in)	10 bar (145 psi)	▪ 3-A marked and EHEDG certified ▪ ASME BPE compliance
	Type F	50 mm (1.97 in)	145 mm (5.71 in)	135 mm (5.31 in)	24 mm (0.95 in)		
	Type N	68 mm (2.67 in)	165 mm (6.5 in)	155 mm (6.1 in)	24.5 mm (0.96 in)		

The VARINLINE® housing connection flange is suitable for weld-in into the conical or torispherical head in tanks or vessels with a small diameter (≤ 1.6 m (5.25 ft)) and up to a wall thickness of 8 mm (0.31 in).

Type	Version	Dimensions			Technical properties
		ΦD	ΦA	h	
SMS 1147 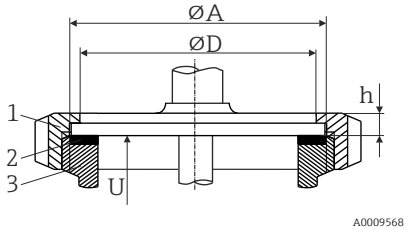 *1 Cap-nut* *2 Sealing ring* *3 Counterpart connection*	DN25	32 mm (1.26 in)	35.5 mm (1.4 in)	7 mm (0.28 in)	$P_{max.}$ = 6 bar (87 psi)
	DN38	48 mm (1.89 in)	55 mm (2.17 in)	8 mm (0.31 in)	
	DN51	60 mm (2.36 in)	65 mm (2.56 in)	9 mm (0.35 in)	

The counterpart connection must fit the sealing ring and fix it in place.

T-piece, optimized (no welding, no dead legs)

Type	Version		Dimensions in mm (in)			Technical properties
			ΦD	L	s [1]	
T-piece for weld-in as per DIN 11865 (series A, B and C)	Series A	DN10 PN25	13 mm (0.51 in)	48 mm (1.89 in)	1.5 mm (0.06 in)	▪ $P_{max.}$ = 25 bar (362 psi) ▪ 3-A marked and EHEDG certified for ≥ DN25 ▪ ASME BPE compliance for ≥ DN25
		DN15 PN25	19 mm (0.75 in)			

Type	Version		Dimensions in mm (in)			Technical properties
			ØD	L	s [1]	
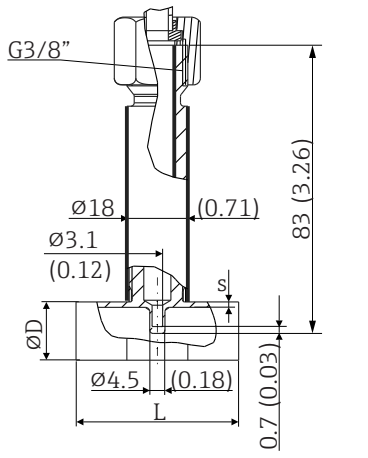		DN20 PN25	23 mm (0.91 in)			
		DN25 PN25	29 mm (1.14 in)			
		DN32 PN25	32 mm (1.26 in)			
	Series B	DN13.5 PN25	13.5 mm (0.53 in)		1.6 mm (0.063 in)	
		DN17.2 PN25	17.2 mm (0.68 in)			
		DN21.3 PN25	21.3 mm (0.84 in)			
		DN26.9 PN25	26.9 mm (1.06 in)			
		DN33.7 PN25	33.7 mm (1.33 in)		2 mm (0.08 in)	
	Series C [2]	DN12.7 PN25 (½")	12.7 mm (0.5 in)		1.65 mm (0.065 in)	
		DN19.05 PN25 (¾")	19.05 mm (0.75 in)			
		DN25.4 PN25 (1")	25.4 mm (1 in)			
		DN38.1 PN25 (1½")	38.1 mm (1.5 in)			

1) Wall thickness
2) Pipe dimensions as per ASME BPE 2012

Elbow piece, optimized (no welding, no dead legs)

Type	Version		Dimensions				Technical properties
			ØD	L1	L2	s [1]	
Corner piece for weld-in as per DIN 11865 (series A, B and C) 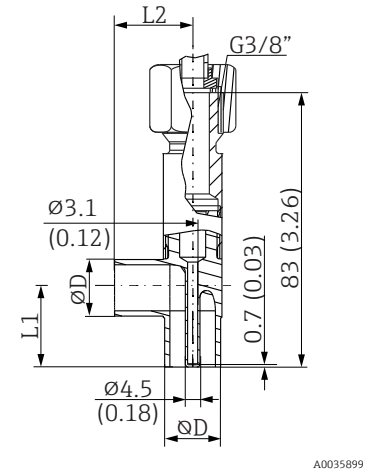	Series A	DN10 PN25	13 mm (0.51 in)	24 mm (0.95 in)		1.5 mm (0.06 in)	▪ $P_{max.}$ = 25 bar (362 psi) ▪ 3-A marked and EHEDG certified for ≥ DN25 ▪ ASME BPE compliance for ≥ DN25
		DN15 PN25	19 mm (0.75 in)	25 mm (0.98 in)			
		DN20 PN25	23 mm (0.91 in)	27 mm (1.06 in)			
		DN25 PN25	29 mm (1.14 in)	30 mm (1.18 in)			
		DN32 PN25	35 mm (1.38 in)	33 mm (1.3 in)			
	Series B	DN13.5 PN25	13.5 mm (0.53 in)	32 mm (1.26 in)		1.6 mm (0.063 in)	
		DN17.2 PN25	17.2 mm (0.68 in)	34 mm (1.34 in)			
		DN21.3 PN25	21.3 mm (0.84 in)	36 mm (1.41 in)			
		DN26.9 PN25	26.9 mm (1.06 in)	29 mm (1.14 in)			
		DN33.7 PN25	33.7 mm (1.33 in)	32 mm (1.26 in)		2.0 mm (0.08 in)	

Type	Version		Dimensions				Technical properties
			ΦD	L1	L2	s [1]	
	Series C	DN12.7 PN25 (½") [2]	12.7 mm (0.5 in)	24 mm (0.95 in)		1.65 mm (0.065 in)	
		DN19.05 PN25 (¾")	19.05 mm (0.75 in)	25 mm (0.98 in)			
		DN25.4 PN25 (1")	25.4 mm (1 in)	28 mm (1.1 in)			
		DN38.1 PN25 (1½")	38.1 mm (1.5 in)	35 mm (1.38 in)			

1) Wall thickness
2) Pipe dimensions as per ASME BPE 2012

Tip shape

The thermal response time, the reduction of the flow cross-section and the mechanical load that occurs in the process are the criteria that matter when selecting the shape of the tip.
Advantages of using reduced or tapered thermometer tips:
- A smaller tip shape has less impact on the flow characteristics of the pipe carrying the medium
- The flow characteristics are optimized
- Thermowell stability is increased

Direct contact, 6 mm (¼ in)	Thermowell, 6 mm (¼ in)
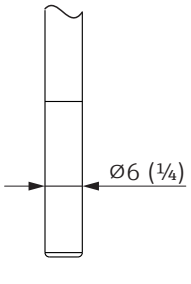	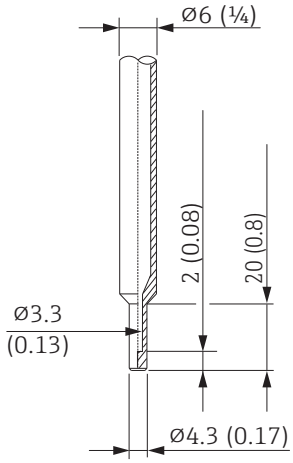

It is possible to verify the mechanical loading capacity as a function of the installation and process conditions using the online TW Sizing Module for thermowells in the Endress+Hauser Applicator software → 32.

Human interface

Operating concept

The device-specific parameters are configured via IO-Link. Special configuration and operating programs are available from various manufacturers for this purpose. The device description file (IODD) is provided for the thermometer.

IO-Link operating concept

Operator-oriented menu structure for user-specific tasks. Guided menus divided by user category:

- Operator
- Maintenance
- Specialist

Efficient diagnostics increase measurement availability

- Diagnostic messages
- Remedial measures
- Simulation options

IODD download

http://www.endress.com/download

- Select **Software** as the media type
- Select **Device Driver** as the software type
  Select IO-Link (IODD)
- In the "Text Search" field enter the device name

https://ioddfinder.io-link.com/

Search by
- Manufacturer
- Article number
- Product type

Local operation

There are no operating elements directly on the device. The temperature transmitter is configured via remote operation.

Local display

There are no display elements directly on the device. The measured value and diagnostic messages, for instance, can be accessed via IO-Link.

Remote operation

IO-Link functions and device-specific parameters are configured via the device's IO-Link communication.

Special configuration kits are available, e.g. the FieldPort SFP20. Every IO-Link device can be configured with it.

IO-Link devices are typically configured via the automation system (e.g. Siemens TIA Portal + Port Configuration Tool). Parameters for device replacement can be stored in the IO-Link master.

Certificates and approvals

CE mark

The product meets the requirements of the harmonized European standards. As such, it complies with the legal specifications of the EC directives. The manufacturer confirms successful testing of the product by affixing to it the CE-mark.

RoHS

The measuring system complies with the substance restrictions of the Restriction on Hazardous Substances Directive 2011/65/EU (RoHS 2).

EAC mark

The product meets the legal requirements of the EEU guidelines. The manufacturer confirms the successful testing of the product by affixing the EAC mark.

cCSAus

The product meets the requirements for electrical safety according to CAN/CSA-C22.2 No. 61010-1-12 or UL 61010-1.

RCM-Tick marking

The supplied product or measuring system meets the ACMA (Australian Communications and Media Authority) requirements for network integrity, interoperability, performance characteristics as well as health and safety regulations. Here, especially the regulatory arrangements for electromagnetic compatibility are met. The products are labelled with the RCM- Tick marking on the name plate.

A0029561

MTBF	For the transmitter: 327 years, according to Siemens Standard SN29500
Hygiene standard	▪ EHEDG certification, type EL CLASS I. EHEDG certified/tested process connections. → 🗎 23 ▪ 3-A Authorization No. 1144, 3-A Sanitary Standard 74-06. Listed process connections. → 🗎 23 ▪ ASME BPE, Declaration of Conformity, can be ordered for options indicated ▪ FDA-compliant ▪ All surfaces in contact with the medium are free from materials derived from bovine animals or other livestock (ADI/TSE)
Materials in contact with food/product (FCM)	The materials of the thermometer in contact with food/product (FCM) comply with the following European regulations: ▪ (EC) No. 1935/2004, Article 3, paragraph 1, Articles 5 and 17 on materials and articles intended to come into contact with food. ▪ (EC) No. 2023/2006 on good manufacturing practice for materials and articles intended to come into contact with food. ▪ (EC) No. 10/2011 on plastic materials and articles intended to come into contact with food.
Schiffbauzulassung	Information on the Type Approval Certificates currently available (DNVGL, BV, etc.) can be obtained from the sales organization.
CRN approval	The CRN approval is only available for certain thermowell versions. These versions are identified and displayed accordingly during the configuration of the device. Detailed ordering information is available for your nearest sales organization www.addresses.endress.com or in the Download Area under www.endress.com : 1. Select the country 2. Select Downloads 3. In the search area: select Approvals/approval type 4. Enter the product code or device 5. Start the search

Other standards and guidelines	▪ Degree of protection provided by enclosures (IP code) according to IEC 60529
	▪ Safety requirements for electrical equipment for measurement, control and laboratory use according to IEC 61010-1
	▪ Industrial platinum resistance thermometers in accordance with IEC 60751
	▪ Electromagnetic compatibility (EMC requirements) IEC/EN 61326 series
	▪ NAMUR International user association of automation technology in process industries (www.namur.de)
	  ▪ NE21 - Electromagnetic Compatibility (EMC) of Industrial Process and Laboratory Control Equipment.
	  ▪ NE43 - Standardization of the Signal Level for the Failure Information of Digital Transmitters.
	▪ Electromagnetic compatibility (EMC) according to IO-Link Specification IEC 61131-09

Surface roughness	Free from oil and grease for O_2 applications, optional
Material resistance	Material resistance - including resistance of housing - to the following Ecolab cleaning/disinfection agents: ▪ P3-topax 66 ▪ P3-topactive 200 ▪ P3-topactive 500 ▪ P3-topactive OKTO ▪ And demineralized water
Material certification	The material certificate 3.1 (according to EN 10204) can be requested separately. The short form certificate includes a simplified declaration with no enclosures of documents related to the materials

used in the design of the individual sensor, but guarantees the traceability of the materials through the identification number of the thermometer. The data regarding the origin of the materials can subsequently be requested by the client if necessary.

Calibration

The factory calibration is performed according to an internal procedure in a laboratory of Endress+Hauser that is accredited by the European Accreditation Organization (EA) according to ISO/IEC 17025. A calibration which is performed according to EA guidelines (SIT/Accredia or DKD/DAkkS) can be requested separately.

The analog current output of the device is calibrated.

Thermowell testing and load capacity calculation

Thermowell pressure testing and thermowell load capacity calculation are performed according to the specifications of DIN 43772. With regard to thermowells with tapered or reduced tips that do not comply with this standard, these are tested using the pressure of corresponding straight thermowells. Tests according to other specifications can be carried out on request.

Ordering information

Detailed ordering information is available for your nearest sales organization www.addresses.endress.com or in the Product Configurator under www.endress.com :

1. Click Corporate
2. Select the country
3. Click Products
4. Select the product using the filters and search field
5. Open the product page

The Configuration button to the right of the product image opens the Product Configurator.

Product Configurator - the tool for individual product configuration

- Up-to-the-minute configuration data
- Depending on the device: Direct input of measuring point-specific information such as measuring range or operating language
- Automatic verification of exclusion criteria
- Automatic creation of the order code and its breakdown in PDF or Excel output format
- Ability to order directly in the Endress+Hauser Online Shop

Accessories

All dimensions in mm (in).

Device-specific accessories

Accessories	Description
Welding boss with sealing taper 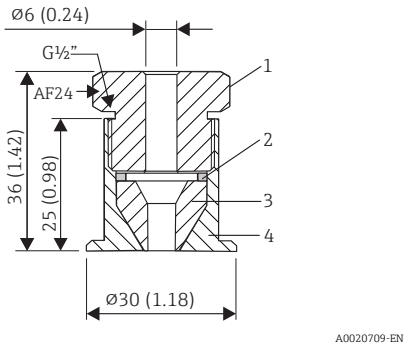 *1 Pressure screw, 303/304* *2 Washer, 303/304* *3 Sealing taper, PEEK* *4 Collar welding boss, 316L*	▪ Collar welding boss movable with sealing taper, washer and pressure screw G½" ▪ Material of parts in contact with the process 316L, PEEK ▪ Max. process pressure 10 bar (145 psi) ▪ Order number with pressure screw 51004751 ▪ Order number without pressure screw 51004752

Accessories	Description
Collar welding boss 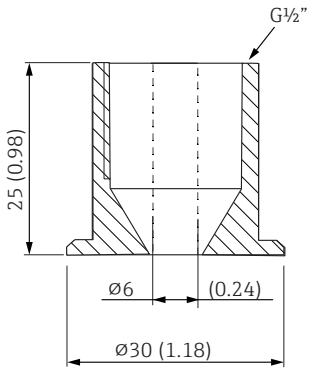 	▪ Material of parts in contact with the process 316L ▪ Order number without pressure screw 51004752

Accessories	Description
Compression fitting 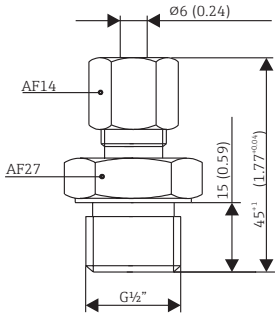 	▪ Movable clamping ring, process connection G½" ▪ Material of compression fitting and parts in contact with the process, 316L ▪ Order number TK40-BADA3C (other versions can be configured in the TK40 structure)

Accessories	Description
Welding boss with sealing taper (metal - metal) 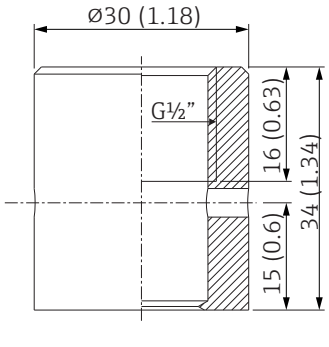 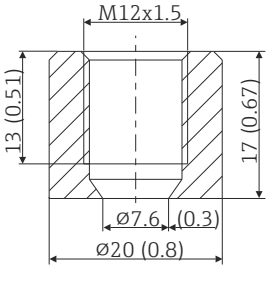 	▪ Welding boss for G½" or M12x1.5 thread ▪ Metal-sealing; conical ▪ Material of parts in contact with the process 316L/1.4435 ▪ Max. process pressure 16 bar (232 PSI) ▪ Order number 71424800 (G½") ▪ Order number 71405560 (M12x1.5)
Dummy plug 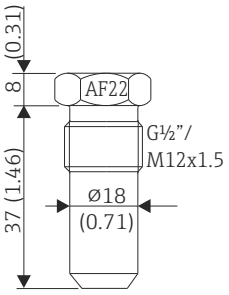 	▪ Dummy plug for G½” or M12x1.5 conical metal-sealing welding boss ▪ Material: SS 316L/1.4435 ▪ Order number 60022519 (G½") ▪ Order number 60021194 (M12x1.5)

Accessories	Description
Weld-in adapter for FTL31/33/20, pipe mounting 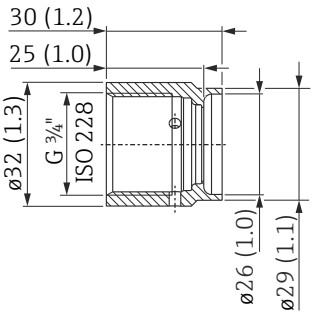 	▪ G¾", d=29 mm, without flange ▪ Material: 316L ▪ Roughness in µm (µin), 1.5 (59.1) ▪ Order number 52028295 (with inspection certificate EN10204-3.1 material) ▪ Order number for seal (5-pc. set), silicone O-ring 52021717 [1], FDA-compliant

1) A seal is included in the delivery.

Accessories	Description
Weld-in adapter for FTL31/33/20, vessel mounting 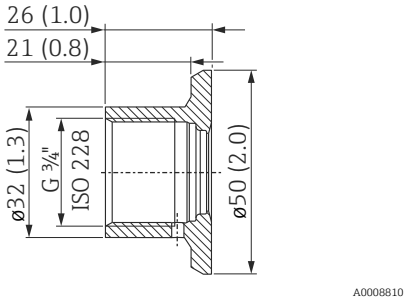 	▪ G¾", d=50 mm, with flange ▪ Material 316L ▪ Roughness in µm (µin), 0.8 (31.5) ▪ Order number 52018765 (with inspection certificate EN10204-3.1 material) ▪ Order number for seal (5-pc. set), silicone O-ring 52021717 [1], FDA-compliant ▪ EHEDG tested and with 3-A mark

1) A seal is included in the delivery.

Accessories	Description
Weld-in adapter for FTL50 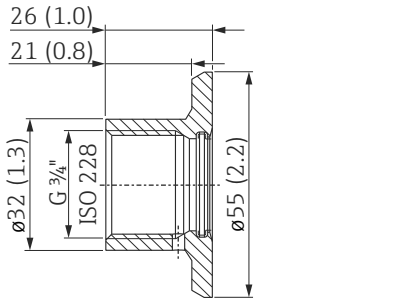 	▪ G¾", d=55 mm, with flange ▪ Material 316L ▪ Roughness in µm (µin), 0.8 (31.5) ▪ Order number 52001052 (without inspection certificate EN10204-3.1 material) ▪ Order number 52011897 (with inspection certificate EN10204-3.1 material) ▪ Order number for seal (5-pc. set), silicone O-ring 52014473 [1], FDA-compliant ▪ EHEDG tested and with 3-A mark

1) A seal is included in the delivery.

Accessories	Description
Weld-in adapter for FTL50 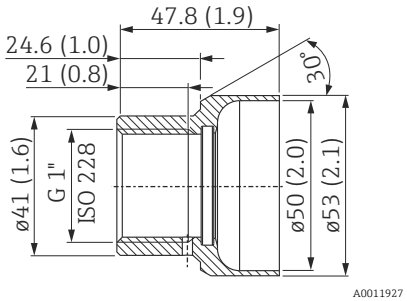 	▪ G1", d=53 mm, without flange ▪ Material 316L ▪ Roughness in µm (µin), 0.8 (31.5) ▪ Order number 71093129 (with inspection certificate EN10204-3.1 material) ▪ Order number for seal (5-pc. set), silicone O-ring 52014472 [1], FDA-compliant

1) A seal is included in the delivery.

Accessories	Description
Weld-in adapter for FTL50 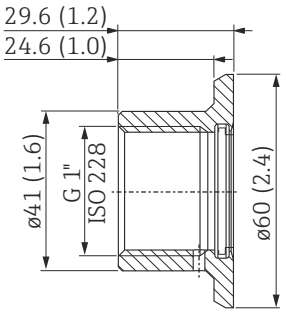 	▪ G1", d=60 mm, with flange ▪ Material 316L ▪ Roughness in µm (µin), 0.8 (31.5) ▪ **Order number:** 52001051 (without inspection certificate EN10204-3.1 material) ▪ Order number 52011896 (with inspection certificate EN10204-3.1 material) ▪ Order number seal (5-pc. set): silicone O-ring 52014472 [1], FDA-compliant ▪ EHEDG tested and with 3-A mark

1) A seal is included in the delivery.

Accessories	Description
Weld-in adapter for FTL50 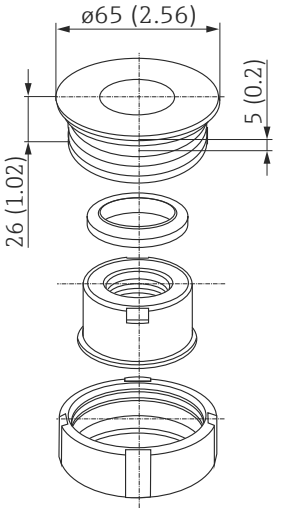 	▪ G1", can be aligned ▪ Material 316L ▪ Roughness in µm (µin), 0.8 (31.5) ▪ Order number 52001221 (without inspection certificate EN10204-3.1 material) ▪ Order number 52011898 (with inspection certificate EN10204-3.1 material) ▪ Order number for seal (5-pc. set), silicone O-ring 52014424 [1], FDA-compliant

1) A seal is included in the delivery.

Maximum process pressure for the weld-in adapters:
- 25 bar (362 psi) at max. 150 °C (302 °F)
- 40 bar (580 psi) at max. 100 °C (212 °F)

For more information on weld-in adapters FTL20, FTL31, FTL33, FTL50, see the Technical Information TI00426F.

Communication-specific accessories

Accessories	Description
FieldPort SFP20	**Mobile configuration tool for all IO-Link devices:** ▪ Pre-installed device and CommDTMs in FieldCare ▪ Pre-installed device and CommDTMs in FieldXpert ▪ M12 connection for IO-Link field devices

Coupling

Accessories	Description
▪ M12x1 coupling; elbowed, for termination of connecting cable by user ▪ Connection to M12x1 housing connector ▪ Body materials PBT/PA, ▪ Cap-nut GD-Zn, nickel-plated ▪ IP67 degree of protection (fully locked) ▪ Order number 51006327 ▪ Voltage: max. 250 V ▪ Current carrying capacity: max. 4 A ▪ Temperature: −40 to 85 °C	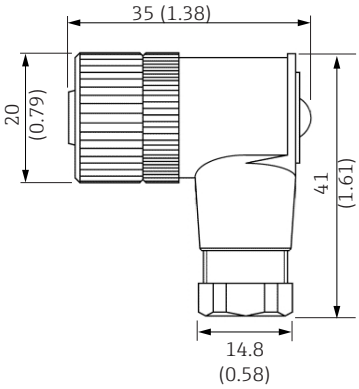

Accessories	Description
▪ PVC cable, 4 x 0.34 mm² (22 AWG) with M12x1 coupling, elbow plug, screw plug, length 5 m (16.4 ft) ▪ IP67 degree of protection ▪ Order number 52024216 ▪ Voltage: max. 250 V ▪ Current carrying capacity: max. 4 A ▪ Temperature: −25 to 70 °C Wire colors: ▪ 1 = BN brown ▪ 2 = WH white ▪ 3 = BU blue ▪ 4 = BK black	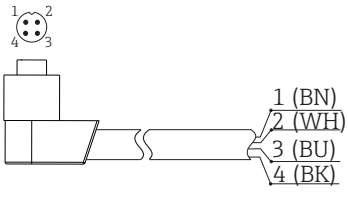

Accessories	Description
▪ PVC cable, 4 x 0.34 mm² (22 AWG) with M12x1 coupling nut made of epoxy coated zinc, straight socket contact, screw plug, 5 m (16.4 ft) ▪ IP67 degree of protection ▪ Order number 71217708 ▪ Voltage: max. 250 V ▪ Current carrying capacity: max. 4 A ▪ Temperature: −20 to 105 °C Wire colors: ▪ 1 = BN brown ▪ 2 = WH white ▪ 3 = BU blue ▪ 4 = BK black	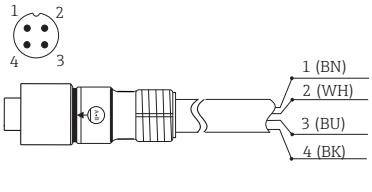

Adapter cables

If a TMR3x is replaced by a TM311, the pin assignment must be changed, as the IO-Link standard requires another assignment than that used in TMR3x devices. Either the wiring is changed in the cabinet or the adapter cable is used for the pin assignment between the device and the existing wiring.

Accessories	Description
▪ Cable: PVC; 2-pin; 2 × 0.34 mm² (AWG22) shielded ▪ Cable length ~ 100 mm (3.94 in) without socket and connector ▪ Color: black ▪ Connector 1: M12, 4-pin, A-coded, socket, straight ▪ Connector 2: M12, 4-pin, A-coded, connector, straight ▪ Metal parts: stainless steel ▪ Voltage: max. 60 V_{DC} ▪ Current carrying capacity: max. 4 A ▪ Degree of protection: IP66, IP67 and IP69 in accordance with IEC 60529 (when connected); NEMA 6P ▪ Temperature: −40 to +85 °C (−40 to +185 °F) ▪ Order number 71449142	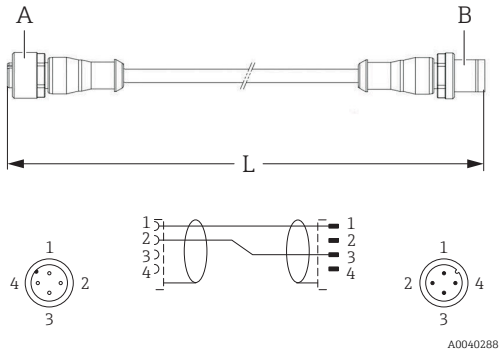 *A M12 socket* *B M12 connector* *L 200 mm (7.87 in)*

Service-specific accessories

Accessories	Description
Applicator	Software for selecting and sizing Endress+Hauser measuring devices: ▪ Calculation of all the necessary data for identifying the optimum measuring device: e.g. pressure loss, accuracy or process connections. ▪ Graphic illustration of the calculation results Administration, documentation and access to all project-related data and parameters over the entire life cycle of a project. Applicator is available: Via the Internet: https://portal.endress.com/webapp/applicator

Accessories	Description
Configurator	Product Configurator - the tool for individual product configuration ▪ Up-to-the-minute configuration data ▪ Depending on the device: Direct input of measuring point-specific information such as measuring range or operating language ▪ Automatic verification of exclusion criteria ▪ Automatic creation of the order code and its breakdown in PDF or Excel output format ▪ Ability to order directly in the Endress+Hauser Online Shop The Configurator is available on the Endress+Hauser website at: www.endress.com -> Click "Corporate" -> Select your country -> Click "Products" -> Select the product using the filters and search field -> Open product page -> The "Configure" button to the right of the product image opens the Product Configurator.

Accessories	Description
W@M	Life cycle management for your plant W@M offers assistance with a wide range of software applications over the entire process: from planning and procurement to the installation, commissioning and operation of the measuring devices. All the relevant information is available for every measuring device over the entire life cycle, such as the device status, device-specific documentation, spare parts etc. The application already contains the data of your Endress+Hauser device. Endress+Hauser also takes care of maintaining and updating the data records. W@M is available: Via the Internet: www.endress.com/lifecyclemanagement

System components

Accessories	Description
IO-Link master BL20	IO-Link master from Turck for DIN rails supports PROFINET, EtherNet/IP and Modbus TCP. With web server for easy configuration.

Accessories	Description
RIA16 field indicator	The field indicator presents the analog measuring signal on the display. The LC display shows the current measured value in digital form and as a bar graph indicating a limit value violation. The indicator is looped into the 4 to 20 mA circuit and gets the required energy from there. For details, see Technical Information TI00144R

Accessories	Description
RIA15 field indicator	Field indicator for integration into 4 to 20 mA, panel mounting For details, see Technical Information TI00143K

Accessories	Description
RIA14 field indicator	Field indicator for integration into 4 to 20 mA, optionally with Ex d approval. For details, see document TI00143R

Accessories	Description
RN221N	Active barrier with power supply for safe separation of 4 to 20 mA standard signal circuits. For details, see Technical Information TI00073R and Operating Instructions BA00202R

Accessories	Description
RNS221	Supply unit for powering two 2-wire measuring devices solely in the non-Ex area. For details, see Technical Information TI00081R and Brief Operating Instructions KA00110R

Supplementary documentation

Operating Instructions

iTHERM CompactLine TM311	BA01952T/09

Brief Operating Instruction

iTHERM CompactLine TM311	KA01437T/09

Technical Information

HAW562 surge arrester	TI01012K/09

Registered trademarks

IO-Link

is a registered trademark of the IO-Link company group.

www.addresses.endress.com

Endress+Hauser

People for Process Automation