BA00287R/09/EN/05.16
71313444

Valid as of version
01.03.xx (device software)

Operating Instructions
RMA42

Process transmitter

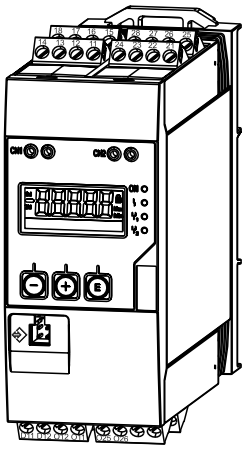

Endress+Hauser
People for Process Automation

Table of contents

1 Document information 4
1.1 Document function 4
1.2 Document conventions 4

2 Safety instructions 6
2.1 Requirements for personnel 6
2.2 Designated use 6
2.3 Workplace safety 6
2.4 Operational safety 6
2.5 Product safety 7

3 Identification 8
3.1 Device designation 8
3.2 Scope of delivery 8
3.3 Certificates and approvals 8

4 Installation 9
4.1 Incoming acceptance, transport, storage 9
4.2 Installation conditions 9
4.3 Dimensions 9
4.4 Installation procedure 10
4.5 Post-installation check 11

5 Wiring 12
5.1 Electrical connection 12
5.2 Post-connection check 15

6 Operation 16
6.1 Operating elements 16
6.2 Display and device status indicator/LED 18
6.3 Icons 19
6.4 Quick guide to the operating matrix 20

7 Commissioning 23
7.1 Post-installation check and switching on the device 23
7.2 General information about configuring the device 23
7.3 Notes on setup access protection 23
7.4 Device configuration 24
7.5 In operation 36

8 Diagnostics and troubleshooting . . . 40
8.1 General troubleshooting 40
8.2 Overview of diagnostic information 40
8.3 Diagnosis list 40

9 Maintenance 42

10 Repairs 43
10.1 General notes 43
10.2 Spare parts 43
10.3 Return 44
10.4 Disposal 44

11 Accessories 45
11.1 Communication-specific accessories 45

12 Technical data 46
12.1 Input 46
12.2 Output 46
12.3 Power supply 48
12.4 Performance characteristics 49
12.5 Installation 50
12.6 Environment 51
12.7 Mechanical construction 52
12.8 Operability 53
12.9 Certificates and approvals 54
12.10 Supplementary documentation 55

13 Appendix 56
13.1 Further explanations on the differential pressure application at level measurement . . . 56
13.2 Display menu 58
13.3 Setup menu 59
13.4 Diagnostics menu 68
13.5 Expert menu 70

Index 77

1 Document information

1.1 Document function

These Operating Instructions contain all the information that is required in various phases of the life cycle of the device: from product identification, incoming acceptance and storage, to mounting, connection, operation and commissioning through to troubleshooting, maintenance and disposal.

1.2 Document conventions

1.2.1 Safety symbols

Symbol	Meaning
DANGER	**DANGER!** This symbol alerts you to a dangerous situation. Failure to avoid this situation will result in serious or fatal injury.
WARNING	**WARNING!** This symbol alerts you to a dangerous situation. Failure to avoid this situation can result in serious or fatal injury.
CAUTION	**CAUTION!** This symbol alerts you to a dangerous situation. Failure to avoid this situation can result in minor or medium injury.
NOTICE	**NOTE!** This symbol contains information on procedures and other facts which do not result in personal injury.

1.2.2 Electrical symbols

Symbol	Meaning
A0011197	**Direct current** A terminal to which DC voltage is applied or through which direct current flows.
A0011198	**Alternating current** A terminal to which alternating voltage is applied or through which alternating current flows.
A0017381	**Direct current and alternating current** ▪ A terminal to which alternating voltage or DC voltage is applied. ▪ A terminal through which alternating current or direct current flows.
A0011200	**Ground connection** A grounded terminal which, as far as the operator is concerned, is grounded via a grounding system.
A0011199	**Protective ground connection** A terminal which must be connected to ground prior to establishing any other connections.
A0011201	**Equipotential connection** A connection that has to be connected to the plant grounding system: This may be a potential equalization line or a star grounding system depending on national or company codes of practice.
A0012751	**ESD - Electrostatic discharge** Protect the terminals against electrostatic discharge. Failure to comply with this instruction can result in the destruction of parts or malffunction of the electronics.

1.2.3 Symbols for certain types of information

Symbol	Meaning
	Permitted Procedures, processes or actions that are permitted.
	Preferred Procedures, processes or actions that are preferred.
	Forbidden Procedures, processes or actions that are forbidden.
	Tip Indicates additional information.
	Reference to documentation
	Reference to page
	Reference to graphic
1., 2., 3....	Series of steps
	Result of a step
	Help in the event of a problem
	Visual inspection

1.2.4 Symbols in graphics

Symbol	Meaning
1, 2, 3,...	Item numbers
1., 2., 3....	Series of steps
A, B, C, ...	Views
A-A, B-B, C-C, ...	Sections
A0013441	Flow direction
A0011187	**Hazardous area** Indicates a hazardous area.
A0011188	**Safe area (non-hazardous area)** Indicates a non-hazardous area.

1.2.5 Tool symbols

Symbol	Meaning
A0011220	Flat blade screwdriver
A0011221	Allen key
A0011222	Open-ended wrench
A0013442	Torx screwdriver

2 Safety instructions

2.1 Requirements for personnel

The personnel for installation, commissioning, diagnostics and maintenance must fulfill the following requirements:
- Trained, qualified specialists must have a relevant qualification for this specific function and task.
- Are authorized by the plant owner/operator.
- Are familiar with federal/national regulations.
- Before starting work, read and understand the instructions in the manual and supplementary documentation as well as the certificates (depending on the application).
- Follow instructions and comply with basic conditions.

The operating personnel must fulfill the following requirements:
- Are instructed and authorized according to the requirements of the task by the facility's owner-operator.
- Follow the instructions in this manual.

2.2 Designated use

The process transmitter evaluates analog process variables and displays them on its multicolored screen. Processes can be monitored and controlled with the unit's outputs and limit relays. The device is equipped with a wide array of software functions for this purpose. Power can be supplied to 2-wire sensors with the integrated loop power supply.

- The device is an associated apparatus and may not be installed in the hazardous area.
- The manufacturer accepts no liability for damages resulting from incorrect use or use other than that designated. It is not permitted to convert or modify the device in any way.
- The device is designed for operation in an industrial environment and may only be operated in an installed state.

2.3 Workplace safety

For work on and with the device:
- Wear the required personal protective equipment according to federal/national regulations.

2.4 Operational safety

Risk of injury.
- Operate the device in proper technical condition and fail-safe condition only.
- The operator is responsible for interference-free operation of the device.

Conversions to the device

Unauthorized modifications to the device are not permitted and can lead to unforeseeable dangers.
- If, despite this, modifications are required, consult with Endress+Hauser.

Repair

To ensure continued operational safety and reliability,
- Carry out repairs on the device only if they are expressly permitted.
- Observe federal/national regulations pertaining to repair of an electrical device.
- Use original spare parts and accessories from Endress+Hauser only.

Environmental requirements

If a plastic transmitter housing is permanently exposed to certain steam and air mixtures, this can damage the housing.

- If you are unsure, please contact your Endress+Hauser Sales Center for clarification.
- If used in an approval-related area, observe the information on the nameplate.

2.5 Product safety

This measuring device is designed in accordance with good engineering practice to meet state-of-the-art safety requirements, has been tested, and left the factory in a condition in which it is safe to operate.

It meets general safety standards and legal requirements. It also complies with the EU/EEU directives listed in the device-specific Declaration of Conformity. Endress+Hauser confirms this by affixing the CE/EAC mark to the device.

3 Identification

3.1 Device designation

3.1.1 Nameplate

Compare the nameplate on the device with the following diagram:

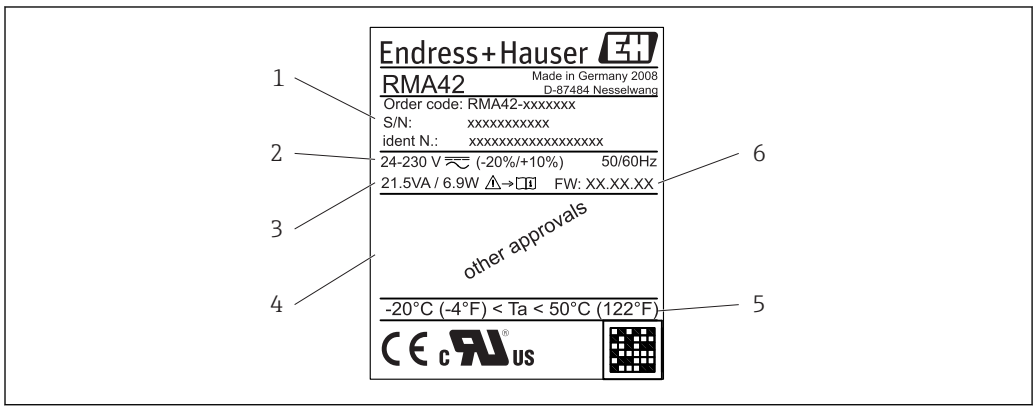

1 Nameplate of the process transmitter (example)

1 *Device order code, serial number and ID number*
2 *Power supply*
3 *Power consumption*
4 *Approvals (if applicable)*
5 *Temperature range*
6 *Firmware version*

3.2 Scope of delivery

The scope of delivery of the process transmitter comprises:

- Process transmitter for DIN rail mounting
- Brief Operating Instructions and Ex documentation (optional) as hard copy

Please note the device accessories in the "Accessories" section.

3.3 Certificates and approvals

An overview of all available certificates and approvals is provided in the "Technical data" section → 54.

3.3.1 CE mark

The measuring system meets the legal requirements of the applicable EC guidelines. These are listed in the corresponding EC Declaration of Conformity together with the standards applied. Endress+Hauser confirms successful testing of the device by affixing to it the CE mark.

3.3.2 EAC mark

The product meets the legal requirements of the EEU guidelines. The manufacturer confirms the successful testing of the product by affixing the EAC mark.

4 Installation

4.1 Incoming acceptance, transport, storage

The permitted ambient and storage conditions must be observed. The precise specifications can be found in Section "Technical data".

4.1.1 Incoming acceptance

On receipt of the goods, check the following points:
- Are the packaging or contents damaged?
- Is anything missing from the delivery? Compare the scope of delivery with the information you specified in the order.

4.1.2 Transportation and storage

Note the following points:
- Pack the device so that is protected against impact for storage and transportation. The original packaging provides optimum protection.
- The permitted storage temperature range is −40 to 85 °C (−40 to 185 °F); it is possible to store the device in the limit temperature ranges for a limited period (maximum 48 hours).

4.2 Installation conditions

NOTICE

The life-time of the display is shortened when operated in the upper temperature range.
- ▶ To avoid heat accumulation, always make sure the device is sufficiently cooled.
- ▶ Do not operate the device in the upper temperature range over a longer period of time.

The process transmitter is designed for use on the top-hat rail (IEC 60715 TH35). Connections and outputs are provided on the top and underside of the device. Inputs are located on the top, while outputs and the power supply connection are located on the underside of the device. The wires are connected by means of labeled terminals.

Operational temperature range:

Non-Ex/Ex devices: −20 to 60 °C (−4 to 140 °F)

UL devices: −20 to 50 °C (−4 to 122 °F)

4.2.1 Orientation

Vertical or horizontal.

4.3 Dimensions

Note the width of the device: 45 mm (1.77 in).
- Maximum depth incl. top-hat rail clip 118 mm (4.65 in).
- Maximum height incl. terminals 115 mm (4.53 in).
- Housing width 45 mm (1.77 in).

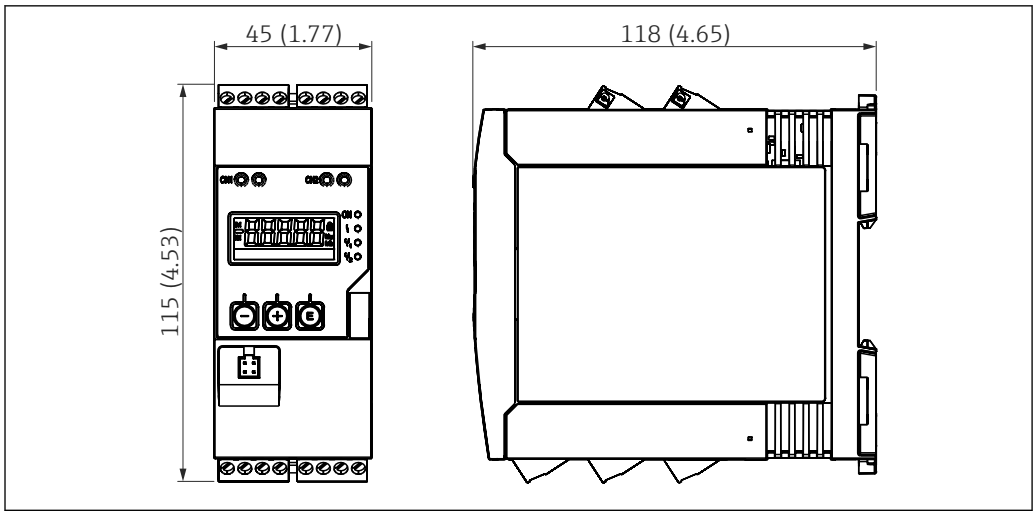

2 Dimensions of the process transmitter in mm (in)

4.4 Installation procedure

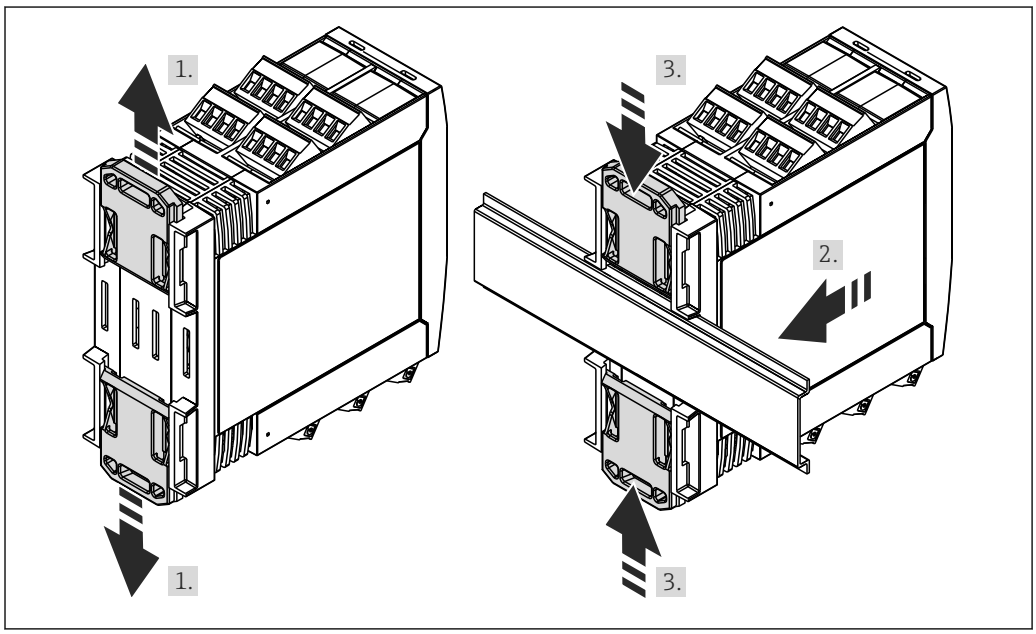

1. Push the upper top-hat rail clip upwards and the lower clip downwards until the clips engage in position.
2. Position the device on the top-hat rail from the front.
3. Slide the two top-hat rail clips together until they engage in position.

To disassemble the device push the top-hat rail clips upwards or downwards (see 1.) and remove the device from the top-hat rail. Also only one clip can be opened and the device can be tilted accordingly to remove it from the top-hat rail.

4.5 Post-installation check

- Is the top-hat rail clip engaged?
- Is the device securely fixed to the top-hat rail?
- Are all the plug-in terminals securely locked in place?
- Are the temperature limits observed at the installation location → 9?

5 Wiring

WARNING

Danger! Electric voltage!

- The entire connection of the device must take place while the device is de-energized.
- The ground connection must be made before all other connections. Danger may arise if the protective ground is disconnected.
- Before commissioning the device, make sure that the supply voltage matches the voltage specifications on the nameplate.
- Provide suitable switch or circuit breaker in building installation. This switch must be provided close to the device (within easy reach) and marked as a circuit breaker.
- Overcurrent protection (rated current ≤ 10 A) is required for the power cable.

- Observe the terminal designation on the side of the device.
- The mixed connection of safety extra-low voltage and dangerous contact voltage to the relay is permitted.

5.1 Electrical connection

A loop power supply (LPS) is provided for every input. The loop power supply is primarily designed to supply power to 2-wire sensors and is galvanically isolated from the system and the outputs.

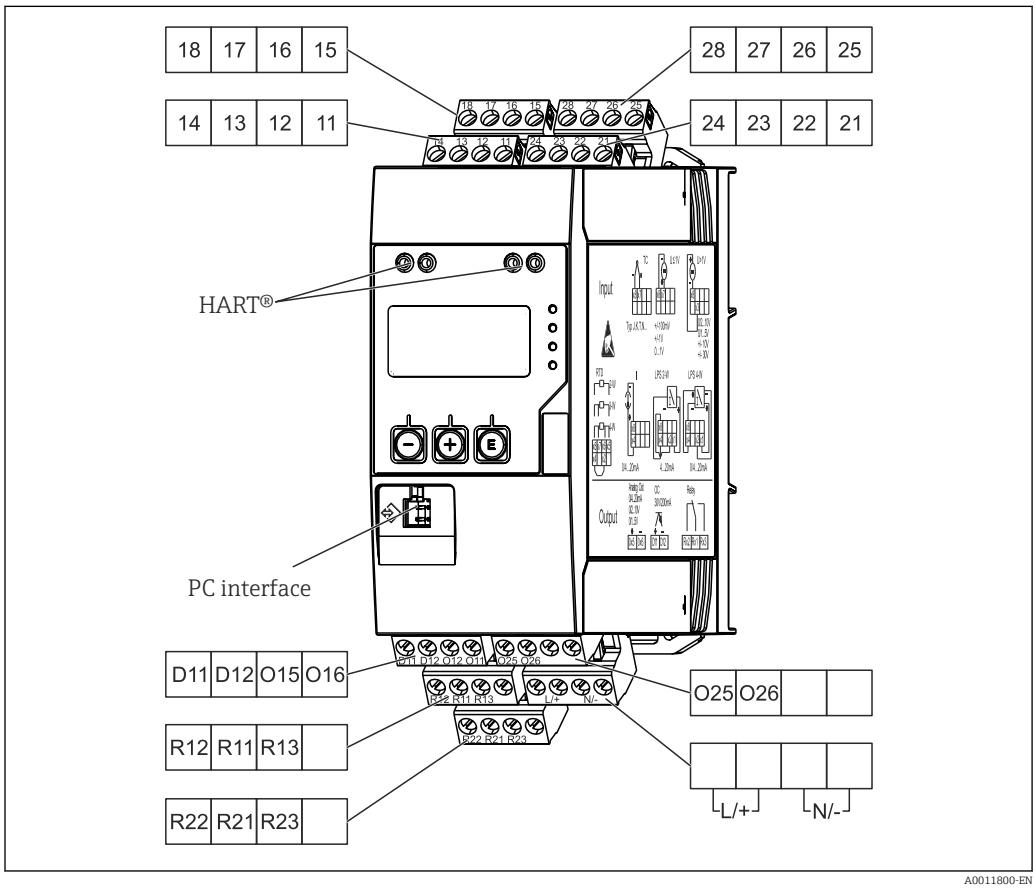

3 *Terminal assignment of process transmitter (channel 2 and relay optional)*

We recommend you connect a suitable surge arrester upstream if high-energy transients can be expected on long signal cables.

5.1.1 Overview of possible connections on the process display unit

Terminal assignment of analog inputs, channel 1 and 2 (optional)

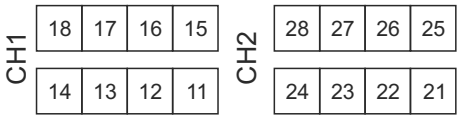

A0011916

Loop power supply connection

2-wire

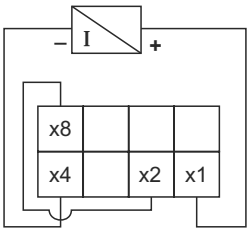

A0011925

4-wire

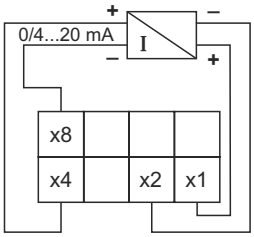

A0011926

Analog input connection

RTD/resistor, 2-wire

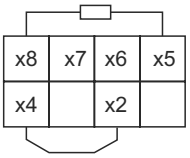

A0011917

RTD/resistor, 3-wire

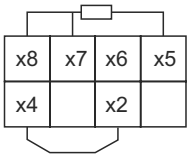

A0011918

RTD/resistor, 4-wire

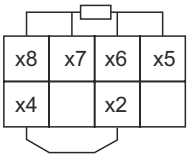

A0011919

Thermocouple

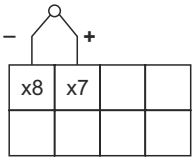

A0011920

U ≤ 1 V

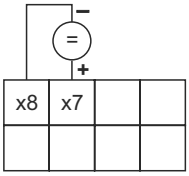

A0011921

U > 1 V

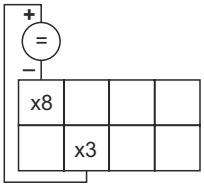

A0011922

Current

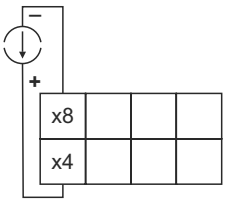

A0011923

(Optional) relay connection	
Relay 1	Relay 2
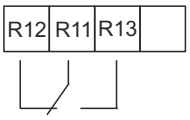 A0011801	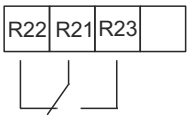 A0011802

Analog output connection	
Analog output 1	Analog output 2 (optional)
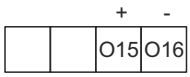 A0011803	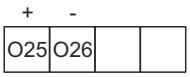 A0011804

Digital output connection
Digital output / open collector
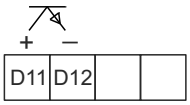 A0011806

Power supply connection
24 to 230 V AC/DC (-20 % / +10 %) 50/60 Hz
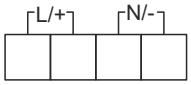 A0011805

Interfaces
Interface for configuring with PC software
A0012418
HART® connection sockets
A0012403

The HART® terminals are connected to the internal resistor of the loop power supply.

There is no internal connection to the current input. If the loop power supply of the device is not used, an external HART® resistor must be used in the 4 to 20 mA current loop.

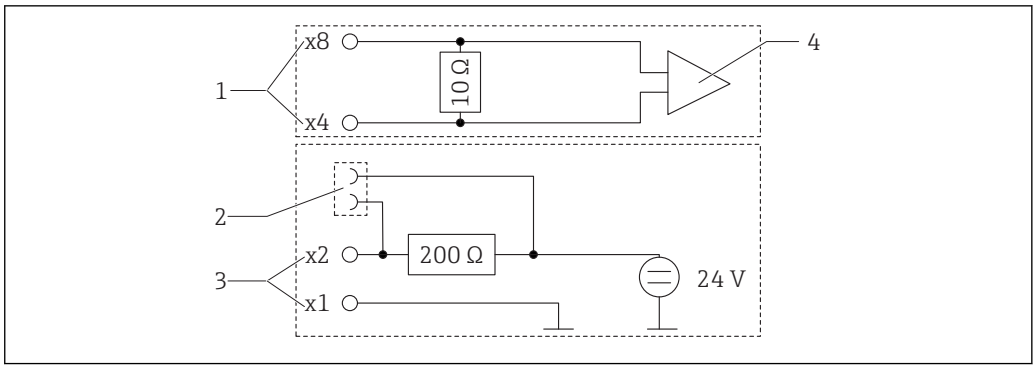

4 Internal circuitry of the HART® connection sockets

1 Current input
2 HART® connection sockets
3 Loop power supply
4 A/D converter

5.2 Post-connection check

Device condition and specifications	**Notes**
Are cables or the device damaged?	Visual inspection
Electrical connection	**Notes**
Does the supply voltage match the specifications on the nameplate?	24 to 230 V AC/DC (-20 % / +10 %) 50/60 Hz
Are all terminals firmly engaged in their correct slot? Is the coding on the individual terminals correct?	-
Are the mounted cables strain-relieved?	-
Are the power supply and signal cables correctly connected?	See the wiring diagram on the housing.

6 Operation

The easy operating concept of the device makes it possible for users to commission the device for many applications without a printed set of Operating Instructions.

The FieldCare operating software is a quick and convenient way of configuring the device. Brief explanatory (help) texts provide additional information on individual parameters.

6.1 Operating elements

6.1.1 Local operation at the device

The device is operated by means of the three keys integrated in the front part of the device

	▪ Open the configuration menu ▪ Confirm an entry ▪ Select a parameter or submenu offered in the menu
	Within the configuration menu: ▪ Scroll step-by-step through the parameters/menu items/characters offered ▪ Change the value of the selected parameter (increase or decrease) Outside the configuration menu: Display enabled and calculated channels, as well as min. and max. values for all the active channels.

You can always exit items/submenus at the end of the menu by selecting "x Back".

Leave the setup directly without saving the changes by pressing the '-' and '+' keys simultaneously for > 3 s.

6.1.2 Configuration via interface & FieldCare Device Setup PC configuration software

⚠ CAUTION

Undefined switching of outputs and relays possible while configuring with FieldCare

▶ Do not configure during running process.

To configure the device with the FieldCare Device Setup software, connect the device to your PC. You need a special interface adapter for this purpose, e.g. the Commubox FXA291.

Installing the communication DTM in FieldCare

Before the configuration of the device can be done, FieldCare Device Setup must be installed on your PC. The installation instructions can be found in the FieldCare instructions.

Subsequently, install the FieldCare device driver according to the following instructions:

1. Firstly, install the device driver "CDI DTMlibrary" in FieldCare. It can be found under "Endress+Hauser Device DTMs → Service / Specific → CDI" in FieldCare.
2. Then the DTM catalog must be updated. Add the new installed DTMs to the DTM catalog.

Installing the Windows driver for the TXU10/FXA291

To install the Windows driver Administrator rights are required. Proceed as follows:

1. Connect the device to the PC using the TXU10/FXA291 interface adapter.
   ↳ A new device is detected and the Windows installation assistant opens.
2. In the installation assistant, do not carry out the automatic search for a driver. For this, choose "No, not this time" and click "Next".
3. In the subsequent window, choose "Install from a list or specific location" and click "Next".
4. In the next window, click "Browse" and select the directory where the driver for the TXU10/FXA291 adapter is located.
   ↳ The driver is installed.
5. Finish the installation by clicking "Finish".
6. A further device is detected and the Windows installation assistant opens once more. Again, choose "No, not this time" and click "Next".
7. In the subsequent window, choose "Install from a list or specific location" and click "Next".
8. In the next window, click "Browse" and select the directory where the driver for the TXU10/FXA291 adapter is located.
   ↳ The driver is installed.
9. Finish the installation by clicking "Finish".

The installation of the Windows driver for the interface adapter is now complete. Which COM-Port has been assigned for the adapter can be seen in the Windows device manager.

Establishing the connection

To establish the connection with FieldCare, proceed as follows:

1. Firstly, edit the connection macro. For this, start a new project and in the window displayed, click with the right mouse button on the symbol for "Service (CDI) FXA291" and choose "Edit".
2. In the following window, next to "Serial interface", select the COM port which has been assigned during the installation of the Windows driver for the TXU10/FXA291 adapter.
   ↳ The macro is now configured. Complete configuration by clicking "Finish".
3. Start the macro "Service (CDI) FXA291" by double-clicking it and confirm the subsequent query with "Yes".
   ↳ A connected device is searched and the suitable DTM is automatically opened. The configuration starts.

To then configure the device itself, follow these Operating Instructions for the device. The entire Setup menu, i.e. all the parameters listed in these Operating Instructions, can also be found in the FieldCare Device Setup.

In general, it is possible to overwrite parameters with the FieldCare PC software and the appropriate device DTM even if access protection is active.

If access protection by means of a code should be extended to the software, this function should be activated in the extended device setup.

For this purpose, select: Menu → Setup / Expert → System → Overfill protect → German WHG and confirm.

6.2 Display and device status indicator/LED

The device provides an illuminated LC display which is split into two sections. The segment section displays the value of the channel and additional information and alarms.

In the dot matrix section, additional channel information, such as the TAG, unit or bar graph, is displayed in the display mode. Operating text in English is displayed here during operation.

The parameters for configuring the display are explained in detail in Section "Configuring the device".

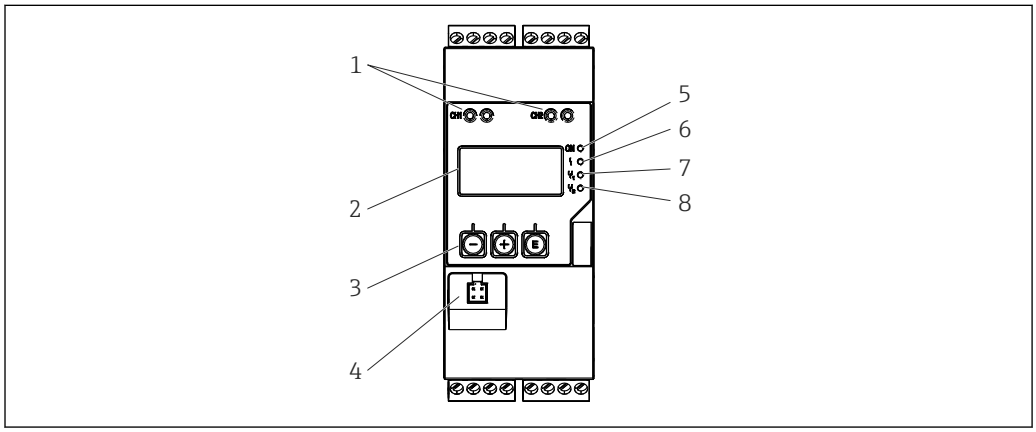

5 Anzeige- und Bedienelemente des Prozesstransmitters

1 *HART® connection sockets*
2 *Display*
3 *Operating keys*
4 *Connection socket for PC interface*
5 *Green LED; on - supply voltage applied*
6 *Red LED; on - error/alarm*
7 *Yellow LED; on - relay 1 energized*
8 *Yellow LED; on - relay 2 energized*

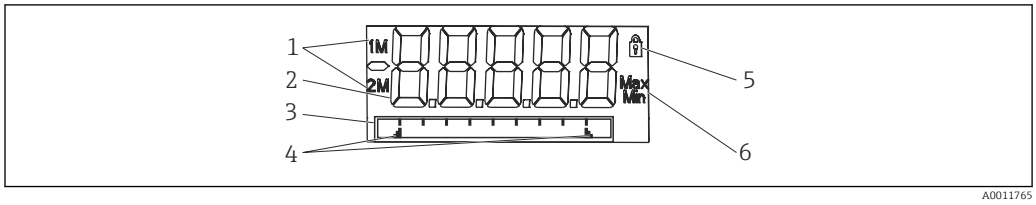

6 Display of the process transmitter

1 *Channel indicator: 1: analog input 1; 2: analog input 2; 1M: calculated value 1; 2M: calculated value 2*
2 *Measured value display*
3 *Dot matrix display for TAG, bar graph and unit*
4 *Limit value indicators in the bar graph*
5 *"Operation locked" indicator*
6 *Minimum/maximum value indicator*

In the event of an error, the device switches automatically between displaying the error and displaying the channel, → 37 and → 40.

6.3 Icons

6.3.1 Display icons

	Device is locked/operating lock; the device setup is locked against changes to parameters, the display can be modified.
1	Channel one (Analog in 1)
2	Channel two (Analog in 2)
1M	First calculated value (Calc value 1)
2M	Second calculated value (Calc value 2)
Max	Maximum value/value of the maximum indicator of the channel displayed
Min	Minimum value/value of the minimum indicator of the channel displayed

In the event of an error:

The display shows: -----, the measured value is not displayed

Underrange/overrange: -----

In the dot matrix section, the error and channel name (TAG) are specified.

6.3.2 Icons in the editing mode

The following characters can be used to enter user-defined text:

‘0-9’, ‘a-z’, ‘A-Z’, ‘+’, ‘-’, ‘*’, ‘/’, ‘\’, ‘%’, ‘°’, ‘2’, ‘3’, ‘m’, ‘.’, ‘,’, ‘;’, ‘:’, ‘!’, ‘?’, ‘_’, ‘#’, ‘$’, ‘"’, ‘´’, ‘(’, ‘)’, ‘~’

For numerical entries, the numbers ‘0-9’ and the decimal point are available.

Furthermore, the following icons are used in the editing mode:

	Symbol for the setup
	Symbol for the Expert setup
	Symbol for diagnostics
	Accept entry. If this icon is selected, the information entered is accepted at the position and the user exits the editing mode.
	Reject entry. If this icon is selected, the information entered is rejected and the user exits the editing mode. The text configured beforehand remains unchanged.
	Move one position to the left. If this icon is selected, the cursor moves one position to the left.
	Delete back. If this icon is selected, the character to the left of the cursor is deleted.
	Delete all. If this icon is selected, all the information entered is deleted.

6.4 Quick guide to the operating matrix

The following tables show all menus and the operating functions.

Display menu		Description
E	AI1 Reset minmax*	Reset the min/max values for Analog in 1
+	AI2 Reset minmax*	Reset the min/max values for Analog in 2
+	CV1 Reset minmax*	Reset the min/max values for Calc value 1
+	CV2 Reset minmax*	Reset the min/max values for Calc value 2
+	Analog in 1	Display setting for Analog in 1
+	Analog in 2	Display setting for Analog in 2
+	Calc value 1	Display setting for Calc value 1
+	Calc value 2	Display setting for Calc value 2
+	Contrast	Display contrast
+	Brightness	Display brightness
+	Alternating time	Switchover time between values chosen to be displayed
+	Back	Return to main menu
*) Is only displayed if "Allow reset" = "Yes" is set in the "Expert" menu for the corresponding channel.		

Setup menu			Description
E	Application		Application selection
		1-channel	1-channel application
		2-channel	2-channel application
		Diff-pressure	Difference pressure application
+	AI1 Lower range*		Lower measuring range limit for Analog in 1
+	AI1 Upper range*		Upper measuring range limit for Analog in 1
+	AI2 Lower range*		Lower measuring range limit for Analog in 2
+	AI2 Upper range*		Upper measuring range limit for Analog in 2
+	CV Factor*		Factor for calculated value
+	CV Unit*		Unit for calculated value
+	CV Bar 0%*		Lower limit for bargraph of calculated value
+	CV Bar 100%*		Upper limit for bargraph of calculated value
+	Linearization*		Linearization of calculated value
		No lin points	Number of linearization points
		X-value	X-values for linearization points
		Y-value	Y-values for linearization points
+	Analog in 1		Analog input 1
		Signal type	Signal type
		Signal range	Signal range
		Connection	Connection type (only for Signal type = RTD)
		Lower range	Lower limit of measuring range
		Upper range	Upper limit of measuring range
		Tag	Designation of analog input
		Unit	Unit of analog input
*) Is only displayed if "Application" = "Diff pressure" is configured.			

Setup menu			Description
		Temperature unit	Unit for temperature; only visible is "Signal type" = RTD or TC
		Offset	Offset of analog input
		Ref junction	Reference junction (only for Signal type = TC)
		Reset min/max	Reset min/max value for analog input
⊞	Analog in 2		Analog input 2
		see Analog in 1	
⊞	Calc value 1		Calculated value 1
		Calculation	Type of calculation
		Tag	Designation of calculated value
		Unit	Unit of calculated value
		Bar 0%	Lower limit for bargraph of calculated value
		Bar 100%	Upper limit for bargrapg of calculated value
		Factor	Factor for calculated value
		Offset	Offset for calculated value
		No lin points	Number of linearization points
		X-value	X-values for linearization points
		Y-value	Y-values for linearization points
		Reset min/max	Reset min/max values
	Calc value 2		Calculated value 2
		See Calc value 1	
⊞	Analog out 1		Analog output 1
		Assignment	Assignment for analog output
		Signal type	Signal type of analog output
		Lower range	Lower range limit of analog output
		Upper range	Upper range limit of analog output
⊞	Analog out 2		Analog output 2
		See Analog out 1	
⊞	Relay 1		Relay 1
		Assignment	Assignment of value to be monitored with relay
		Function	Operating function for relay
		Set point	Set point for relay
		Set point 1/2	Set points 1 and 2 for relay (only, if Function = Inband, Outband)
		Time base	Time base for gradient evaluation (only, if Function = Gradient)
		Hysteresis	Hysteresis for relay
⊞	Relay 2		Relay 2
		See Relay 1	
⊞	Back		Return to main menu

*) Is only displayed if "Application" = "Diff pressure" is configured.

Diagnostics menu		Description
E	Current diagn	Current diagnostic
+	Last diagn	Last diagnostic
+	Operating time	Operating time of the device
+	Diagnost logbook	Diagnostics logbook
+	Device information	Device information
+	Back	Return to main menu

Expert menu				Description
E	Direct access			Direct access to an operting function
+	System			System settings
		Access code		Protection of operating menu by means of access code
		Overfill protect		Overfill protection
		Reset		Device reset
		Save user setup		Save settings made in the setup
+	Input			Inputs
	The following parameters are available in addition to the parameters from the Setup menu:			
		Analog in 1 / 2		Analog input 1 / 2
			Bar 0%	Lower limit for bargraph of analog input
			Bar 100%	Upper limit for bargraph of analog input
			Decimal places	Decimal place for analog input
			Damping	Damping
			Failure mode	Failure mode
			Fixed fail value	Fixed value in the event of an error (only, if Failure mode = Fixed value)
			Namur NE43	Error limits according Namur
			Allow reset	Allow reset of min/max values via Display menu
+	Output			Outputs
	The following parameters are available in addition to the parameters from the Setup menu:			
		Analog out 1 / 2		Analog output 1 / 2
			Fail mode	Failure mode
			Fixed fail value	Fixed value in the event of an error (only, if Fail mode = Fixed value)
		Relay 1 / 2		Relay 1/2
			Time delay	Switching delay time
			Operating mode	Operating mode
			Failure mode	Behavior in the event of an error

7 Commissioning

7.1 Post-installation check and switching on the device

Make sure that all post-connection checks have been carried out before putting your device into operation:
- "Post-installation check" checklist → 11
- "Post-connection check" checklist → 15

After the operating voltage is applied, the green LED lights up and the display indicates the device is ready for operation.

If you are commissioning the device for the first time, program the setup as described in the following sections of the Operating Instructions.

If you are commissioning a device that is already configured or preset, the device starts measuring immediately as defined in the settings. The values of the channels currently activated are shown on the display. Changes to the display can be made in the Display menu item → 33.

Remove the protective film from the display as this would otherwise affect the readability of the display.

7.2 General information about configuring the device

You can configure your device onsite or put it into operation using the three integrated keys or via the PC. You require the Commubox FXA291/TXU10 (see the 'Accessories' section) to connect the device to a PC.

Advantages of configuring via FieldCare Device Setup:
- The device data are saved in FieldCare Device Setup and can be retrieved at any time.
- Data entry is faster with the keyboard.

7.3 Notes on setup access protection

Access to the setup is enabled by default (factory setting) and can be locked via the setup settings.

Proceed as follows to lock the device:

1. Press **E** to enter the configuration menu.
2. Press **+**, **Setup** is displayed.
3. Press **E** to open the **Setup** menu.
4. Repeatedly press **+** until **System** is displayed.
5. Press **E** to open the **System** menu.
6. **Access code** is displayed.
7. Press **E** to open the setting for access protection.
8. Set the code: press the **+** and **-** buttons to set the desired code. The access code is a four-digit number. The corresponding position of the number is displayed in plain text. Press **E** to confirm the value entered and go to the next position.

9. Confirm the last position of the code in order to exit the menu. The full code is displayed. Press **+** to scroll back to the last item of the **x Back** submenu and confirm this item. By confirming the point, the value is adopted and the display returns to the **Setup** level. Again select the last parameter **x Back** to also exit this submenu and return to the measured value/channel display level.

The **x Back** item at the end of every picklist/menu item takes the user from the submenu to the next menu level up.

7.4 Device configuration

Configuration steps:

1. Selection of the application conditions (only for 2-channel device) → 24
2. Configuration of the universal input(s) → 26
3. Configuration of calculations → 27
4. Configuration of the analog output(s) → 28
5. Configuration of the relays (if option selected); assignment and monitoring of limit values → 28
6. Advanced device configuration (access protection/operating code; backup of current setup/user setup) → 32
7. Configuration of display functionalities → 33

The following section provides a detailed account of how to set up the two-channel device and the differential pressure application package (brief overview of the configuration → 25, only available in the two-channel version). If you want to configure a single-channel device, please proceed as described in Step 2 → 26.

7.4.1 Step 1: Selecting the application conditions/number of active input channels

Application conditions for two-channel device

Call up the Setup menu after performing the post-installation check.

Press **E** → press **+** → **Setup** is displayed → press **E**.

Select your application conditions in the first item of the setup. You have a choice of the following settings:
- Differential pressure (Diff pressure): application package; parameters are automatically preselected for you.
- One-channel (1-channel): universal input 2 (Analog in 2) is deactivated (off) in the software. The second channel can be subsequently activated any time via **Setup** → **Analog in 2** → 26.
- Two-channel (2-channel): universal input 1 (Analog in 1) and universal input 2 (Analog in 2) are pre-configured with the following values:
  - Signal type: **Current**
  - Signal range: **4-20mA**

A full description of the "Differential pressure" application package is provided in the following section.

To set up the device in single-channel/two-channel applications, please proceed with the device setup as explained in Step 2 → 26.

If the application or the selected parameter are subsequently changed, parameters already configured are retained (e.g. if the differential pressure application is changed to two-channel, **Calc value 1** remains set to Difference).

Differential pressure application

A concise setup is available for differential pressure applications.

Once the differential pressure application setup has been completed successfully, the difference between the two inputs is automatically calculated and the signal linearized using the configured parameters of the analog inputs and the linearization points. As a result, the volume is already shown on the display (= calculated value 2).

Prerequisites for correct value calculation and a functioning setup:
- Sensor 1 returns the higher pressure: connected to analog input 1 (Analog in 1)
- Sensor returns the lower pressure: connected to analog input 2 (Analog in 2)

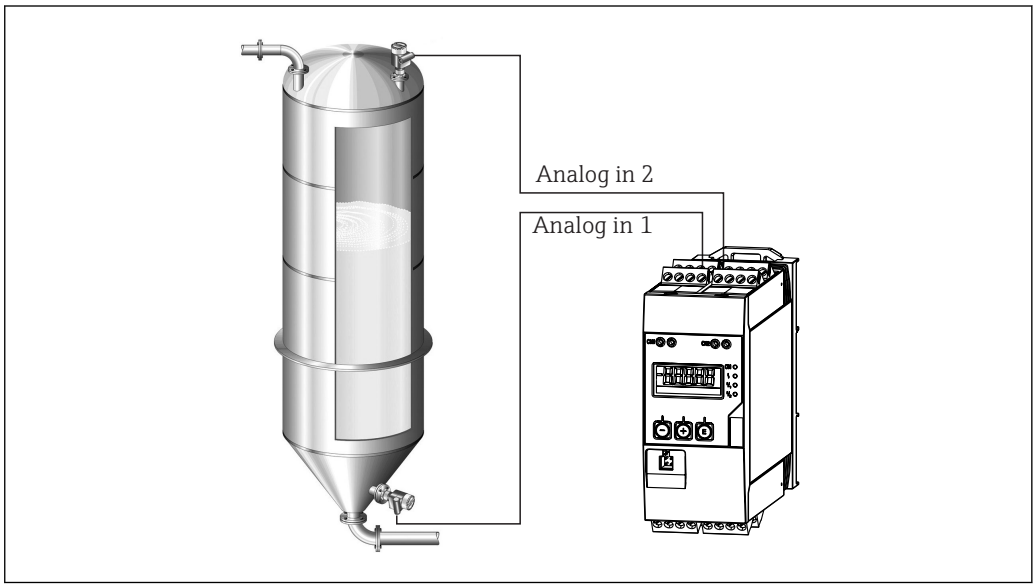

7 *Differential pressure application*

Setup → Application → Diff pressure

Once the differential pressure application has been selected by confirming the **Diff pressure** parameter, the editable parameters are displayed in succession and must be configured individually for your application.

Some parameters are already configured for you if the application setup is selected → 26.

The **CV Factor** parameter is used to take the density of the medium into account during level measurement, i.e. it corresponds to the mathematic formula 1/(density*gravitational acceleration). The default value for the factor is 1.

The density must be given in kg/m³ and the pressure in Pascal (Pa) or N/m². The gravitational acceleration is defined by the constant on the earth's surface.

This is g=9.81 m/s2. Tables and examples for converting application-related units into the defined values kg/m³ and Pa or N/m² can be found in the appendix → 56.

Other parameters can be enabled in the setup for the corresponding parameter (see Steps 4, 5, 6 and 7 or offset for analog inputs, display original values of analog channels, etc.).

'Setup' menu item

Setup → Application → 'Diff pressure'	
Preconfigured by application package	**Submenu**
Setup analog inputs Signal: **Current** Range: **4-20 mA** → 24 and → 26	**AI1 Lower range**: start of measuring range, analog input 1 (corresponds to 4 mA for example)
	AI1 Upper range: end of measuring range, analog input 1 (corresponds to 20 mA for example)
	AI2 Lower range: start of measuring range, analog input 2 (corresponds to 4 mA for example)
	AI2 Upper range: end of measuring range, analog input 2 (corresponds to 20 mA for example)
Setup display Display: calculated value and bar graph for **Calc Value 2**: Active; all other values inactive → 33	**CV Unit**: unit of the calculated volume value (e.g.liters)
	CV Bar 0%: start of measuring range for bar graph display
	CV Bar 100%: end of measuring range for bar graph display
CV Factor	**CV Factor**: factor to take the density of the medium into account during level measurement, i.e. it corresponds to the mathematic formula 1/(density*gravitational acceleration); default value: 1
Setup calculation of the volume: Calc value 1: **Difference** Calc value 2: **Lineariz. CV1** → 27	Create the linearization table: If the volume value should be calculated - i.e. a linearization of the difference is output - the X and Y coordinates must be specified as the basis for performing the calculation.
	No lin points: number of linearization points required (max. 32)
	X-value: X-coordinate for linearization point X1, 2, etc.
	X-value: Y-coordinate for linearization point X1, 2, etc.
	End differential pressure setup

7.4.2 Step 2: Configuring the universal input(s) (Analog in 1/2)

The device has one universal input, and optionally an additional universal input for current, voltage, resistance thermometers (RTD) or thermocouples (TC).

The input is monitored for a cable open circuit (see the Measuring range limits table → 37 and the Troubleshooting section → 40).

Minimum/maximum values at the inputs:

The current min./max. value is saved every 15 minutes. If the power supply is disconnected (power off/power on), there may be a gap in the recording sequence. The measuring interval starts when the device is switched on. It is not possible to synchronize the measuring cycles to full hours.

Limit values and relays are available for monitoring the measured values. They must be configured as described in Step 5 → 28.

Each universal input saves the smallest and largest measured value that is measured. These values can be reset individually for every channel. In the setup, the administrator can specify that a user can reset the minimum and maximum values of the individual channels directly in the main menu without the need for a release code. The min./max. value is reset if a reset is performed and if channel scaling is changed.

Setup
Analog in 1 **Analog in 2**

<table>
<tr><td>Current</td><td>Voltage</td><td>RTD (resistance temperature detector)</td><td>TC (thermocouple)</td><td rowspan="8">Off (deactivate the input)</td></tr>
<tr><td colspan="4">Signal range
Signal range (see Technical data); start and end of measuring range defined by the type selected</td></tr>
<tr><td colspan="2">Lower range
Start of measuring range; also enter the decimal point</td><td rowspan="2">Connection (RTD only)
Type of connection (2-, 3-, 4-wire connection)</td><td rowspan="2"></td></tr>
<tr><td colspan="2">Upper range
End of measuring range; also enter the decimal point</td></tr>
<tr><td colspan="4">TAG
Channel ident.</td></tr>
<tr><td colspan="4">Unit
Unit</td></tr>
<tr><td colspan="3">Offset
Constant value that is added to the current measured value</td><td></td></tr>
<tr><td colspan="3"></td><td>Ref junction (TC only)
Internal/fixed + entry of "Fixed ref junc"</td></tr>
<tr><td colspan="4">Res minmax: (yes/no)
Reset minimum/maximum values?</td></tr>
</table>

7.4.3 Step 3: Configuring the calculations

One channel or two channels (optional) with the following functions are available for calculations:

<table>
<tr><th colspan="4">Setup</th></tr>
<tr><td colspan="2">Calc value 1</td><td colspan="2">Calc value 2</td></tr>
<tr><td colspan="2">▪ Switched off
▪ Sum (AI1+AI2)
▪ Difference (AI1-AI2)
▪ Average ((AI1+AI2)/2)
▪ Linearization AI1
▪ Multiplication (AI1*AI2)</td><td colspan="2">▪ Switched off
▪ Sum (AI1+AI2)
▪ Difference (AI1-AI2)
▪ Average ((AI1+AI2)/2)
▪ Linearization AI2
▪ Linearization CV1
▪ Multiplication (AI1*AI2)</td></tr>
<tr><td>TAG
Unit
Bar 0%
Bar 100%
Factor
Offset</td><td colspan="3">To be configured like universal input, see Step 2 → 🗎 26</td></tr>
<tr><td colspan="4">No. lin points → X/Y coordinates
The device has two linearization tables, each with a maximum of 32 linearization points. They are permanently assigned to the ‘Calc value 1’ and ‘Calc value 2’ channels. If linearization is selected as the calculation, the number of linearization points needed is specified in the ‘No. lin points’ parameter. An X-coordinate and a Y-coordinate must be specified for each linearization point. The linearization tables can be deactivated individually.</td></tr>
<tr><td>Reset min/max</td><td colspan="3">To be configured like universal input, see Step 2 → 🗎 26</td></tr>
</table>

7.4.4 Step 4: Configuring the analog output(s)

The device has one analog output (optionally two analog outputs). These outputs can be freely assigned to the inputs and channels available in the device.

Setup	
Analog out 1 **Analog out 2**	
Assignment: assignment of the output ▪ **Off**: switched off ▪ **Analog input 1**: universal input 1 ▪ **Analog input 2**: universal input 2 ▪ **Calc value 1**: calculated value 1 ▪ **Calc value 2**: calculated value 2	
Signal type: select active signal range of the output	The output range for the current output corresponds to Namur NE43, i.e. a range to 3.8 mA or 20.5 mA is used. If the value continues to increase (or continues to drop), the current remains at the limits 3.8 mA or 20.5 mA. 0-20 mA output: only the overrange is available. An overrange is also only available for the voltage output. The limit of the overrange is 10% here.
Lower range **Upper range**	To be configured like universal input, see Step 2 → 🗎 26

7.4.5 Step 5: Configuring the relays, assigning and monitoring limit values

As an option, the device has two relays with limit values, which are either switched off, or can be assigned to the input signal or the linearized value of analog input 1 or 2 or the calculated values. The limit value is entered as a numerical value including the position of the decimal point. Limit values are always assigned to a relay. Each relay can be assigned to a channel or a calculated value. In the "Error" mode, the relay functions as an alarm relay and switches each time a fault or alarm occurs.

The following settings can be made for each of the two limit values: assignment, function, set point, hysteresis, switching behavior [1], delay [1] and failsafe mode [1].

Setup	
Relay 1 **Relay 2**	
Assignment: Which value should be monitored?	**Off**, Analog input 1, Analog input 2, Calc value 1, Calc value 2, Error
Function: Operating mode of the relay (for a description, see "Operating modes" → 🗎 29)	Min, Max, Gradient, Out-band, In-band
Set point: **Set point 2**: Limit value	Enter the limit value with the position of the decimal point. Set point 2 is only displayed for out-band and in-band.

1) Can only be set via the Expert menu, Expert/Output/Relay

Time base: Time base for calculating the gradient	Enter the time base in seconds. Only for the Gradient operating mode.
Hysteresis: Hysteresis. For every set point, the switch point can be controlled via a hysteresis.	The hysteresis is configured as an absolute value (only positive values) in the unit of the channel in question (e.g. upper limit value = 100 m, hysteresis = 1 m: limit value on = 100 m, limit value off = 99 m)

- Please note special situations where both the hysteresis and the delay time should be activated simultaneously (see the following description in the "Operating modes" section).
- Following a power failure, the limit value monitoring system behaves as if the limit value had not been active before the power failure, i.e. the hysteresis and any delay are reset.

Relay specification

Relay contact	Changeover
Maximum contact load DC	30 V / 3 A (permanent state, without destroying the input)
Maximum contact load AC	250 V / 3 A (permanent state, without destroying the input)
Minimum contact load	500 mW (12 V / 10 mA)
Galv. isolation towards all other circuits	Test voltage1 500 V_{AC}
Switching cycles	> 1 million
Default setting	Normally closed: NC contact Rx1/Rx2

Operating modes

Off

No action is triggered. The assigned output is always in the normal operating mode.

Min (lower limit value)

The limit is active if the value drops below the configured value. The limit value is switched off again when the limit value incl. hysteresis is exceeded.

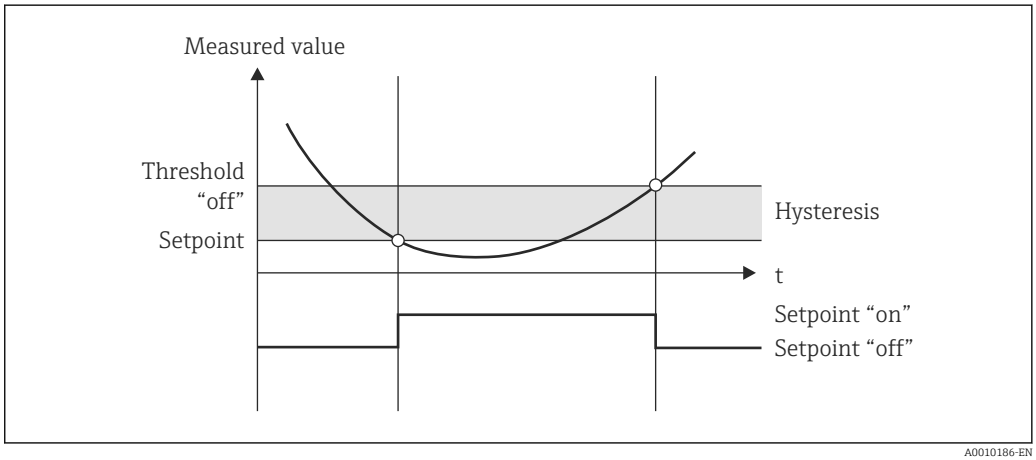

8 *Min operating mode*

Max (upper limit value)

The limit value is active if the value exceeds the configured value. The limit value is switched off again when the limit value incl. hysteresis is undershot.

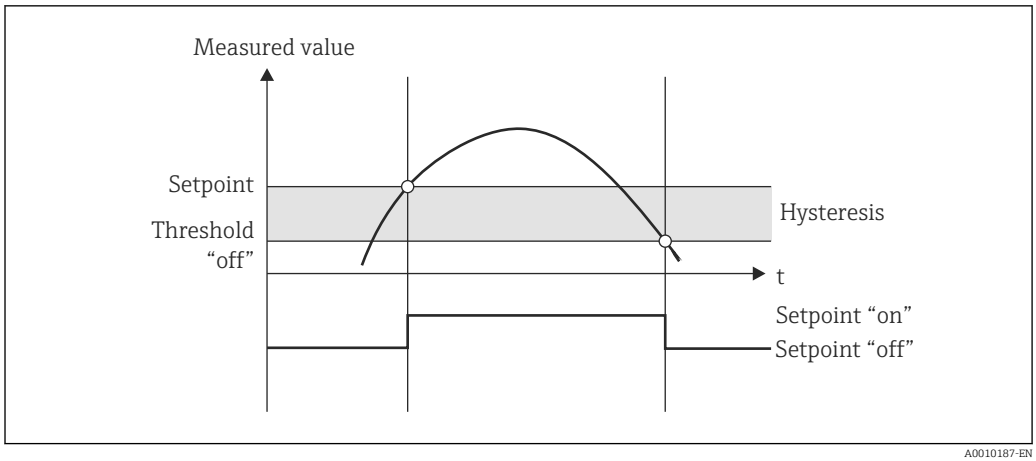

9 *Max operating mode*

Gradient

The "Gradient" operating mode is used to monitor the change of the input signal over time. The alarm is triggered if the measured value reaches or exceeds the preset value. If the user configures a positive value, the limit value is monitored for increasing gradients.

In the case of negative values the decreasing gradient is monitored.

The alarm is canceled when the gradient drops below the preset value. A hysteresis is not possible in the Gradient operating mode. The alarm can be suppressed for the set time delay (unit: seconds s) in order to decrease the sensitivity.

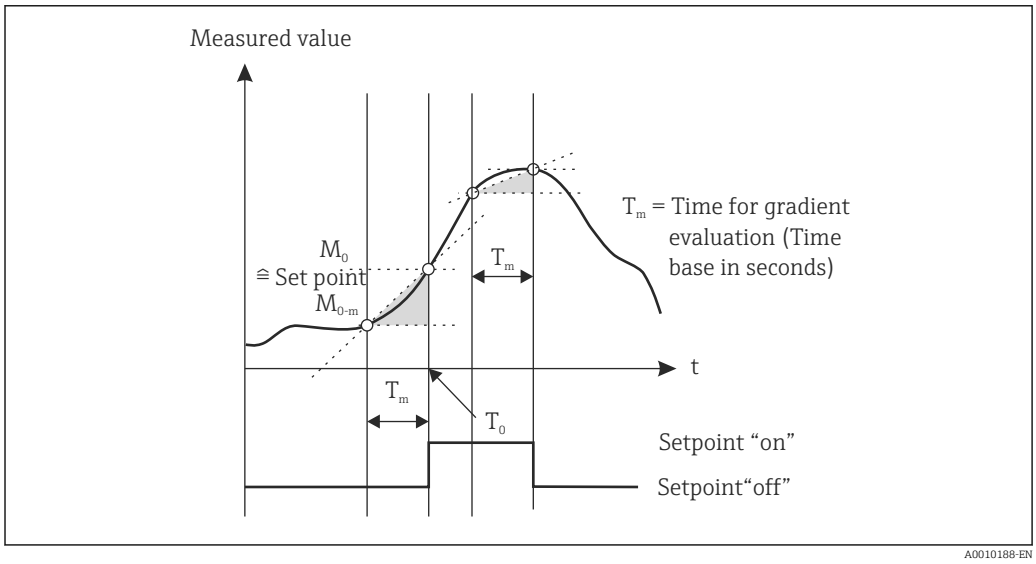

10 *Gradient operating mode*

OutBand

The limit value is violated as soon as the measured value to be checked lies within a preset band between minimum and maximum. The hysteresis must be monitored on the outside of the band.

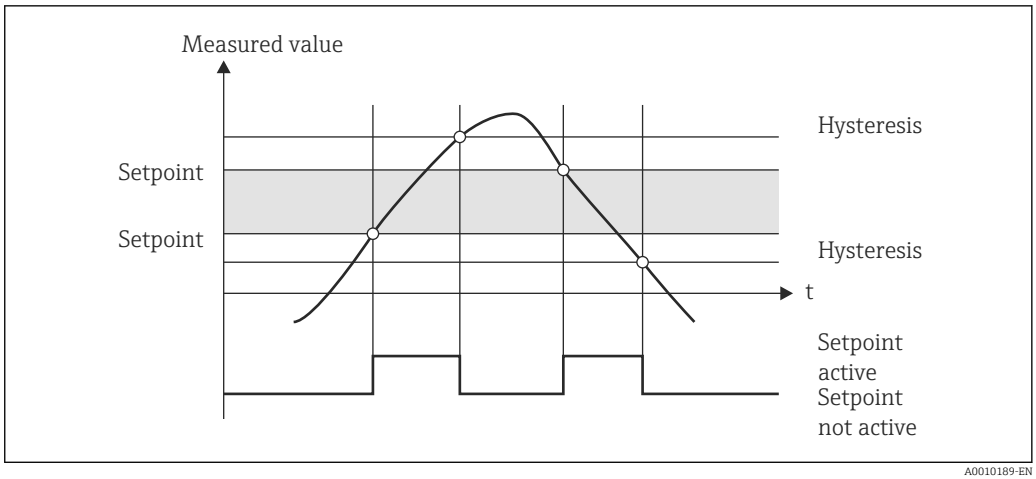

11 *OutBand operating mode*

InBand

The limit value is violated as soon as the measured value to be checked exceeds or drops below a preset maximum or minimum respectively. The hysteresis must be monitored on the inside of the band.

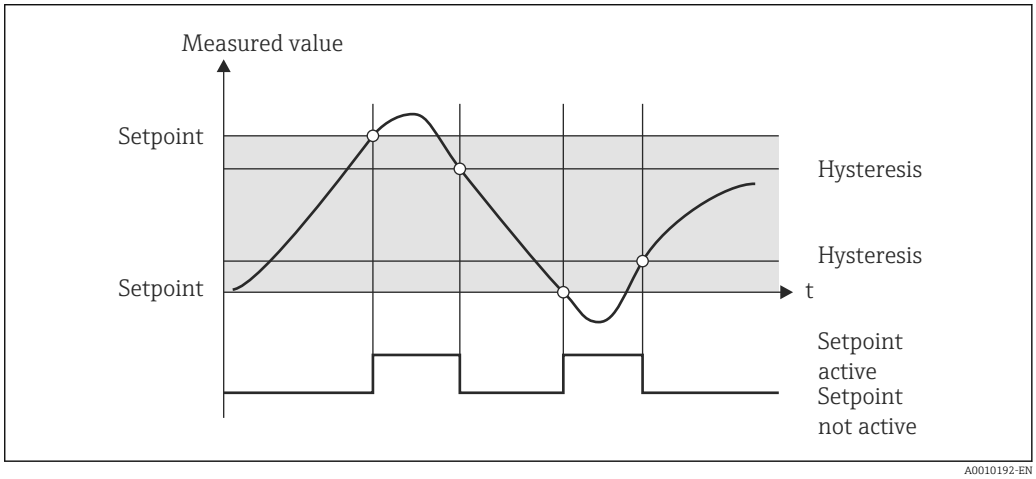

12 *InBand operating mode*

Special case: Hysteresis and delay for one limit value

In the special case that hysteresis and limit value delay are activated, one limit value is switched according to the following principle.

If hysteresis and limit value delay are activated, the delay becomes active when a limit value is exceeded and measures the time from which the value is exceeded. If the measured value falls below the limit value, the delay is reset. This also occurs if the measured value falls below the limit value, but continues to be higher than the set hysteresis value. When the limit value is exceeded again, the time delay once more becomes active and starts measuring from 0.

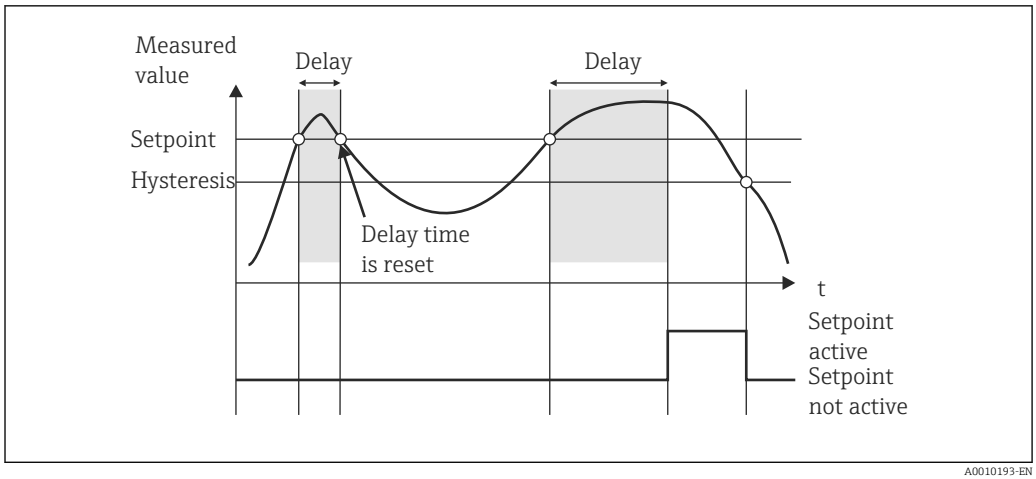

13 Hysteresis and delay active

7.4.6 Step 6: Advanced device configuration (access protection/ operating code, saving the current setup)

Access protection

Access protection locks all the editable parameters, i.e. the setup can only be accessed once the 4-digit user code has been entered.

Access protection is not activated at the factory. However, the configuration of the device can be protected by a four-digit code.

Activating access protection

1. Call the menu ‘Setup’ → ‘System’ → ‘Access code’
2. To enter the code with the ‘+’ and ‘-’ keys, select the desired character and press ‘E’ to confirm. The cursor goes to the next position.
   ↳ After confirming the fourth position, the entry is accepted and the user exits the ‘Access code’ submenu.

Once access protection has been successfully activated, the lock symbol appears on the display.

If access protection is enabled, the device locks automatically after 600 seconds if the device has not been operated during this time. The display switches back to the operating display. To delete the code completely, use the ‘+’ and ‘-’ keys to select the "c" character and press ‘E’ to confirm.

Saving the current setup/user setup

The current device configuration can be saved and is therefore available as a specific setup for a device reset or for a device restart. If you ordered the device with customized settings, the preconfigured setup is also saved in the user setup.

Saving the setup

1. Call the menu ‘Expert’ → ‘System’ → ‘Save User Setup’.
2. Confirm by selecting ‘yes’.

See also under "Device reset" → 38.

7.4.7 Step 7: Configuring the display functions

The display is split into a 7-segment display section and a color section. The dot matrix section can be configured separately for each channel.

Users can choose from all the active channels (analog inputs and calculated values).

To configure the display:

1. Press ‘E’
2. Select ‘Display’.
3. Select channel/calculated value and configure one of the parameters that follow.

Off	Channel is not displayed.	
Activate the display by configuring the color section		
	Value/measured value of the channel is displayed on the 7-segment display.	
	Unit	The unit of the channel is displayed
	Bargraph	The value of the channel is displayed as a bar graph over the entire width.
	Bargr+unit	Division of the color section, displays value of the channel as a bar graph and unit of the channel
	TAG+unit	Division of the color section, displays channel name and unit of the channel

- **Contrast**: select contrast (can be configured in steps of 1 to 7)
- **Brightness**: select brightness (can be configured in steps of 1 to 7)
- **Alternating time**: select the time between automatic switchover between the channels and calculated values (in seconds: 3, 5, or 10)
- **x Back** takes you back to the menu one level up.

If several channels are active, the device switches automatically between the channels configured.

Non-activated channels, calculated values and minimum and maximum values are called up manually by pressing the ‘+’ and ‘-’ keys and appear for 5 seconds on the display.

7.4.8 Overfill protection

The German Water Resources Act (WHG) requires the use of overfill protection units on vessels for water-polluting liquids. These units monitor the level and trigger an alarm in time before the permitted fill level is reached. According to the approval guidelines for overfill protection units (ZG-ÜS), suitable plant units must be used for this.

In accordance with these guidelines, the device can be used as a limit signal transmitter for overfill protection units with continuous level measurement for storing liquids which are hazardous to water (water-polluting liquids).

As a prerequisite the device must comply with the general and special construction principles (chapters 3 and 4) of the approval guidelines for overfill protection units. This means that the safety-oriented message "Maximum level" is displayed (the limit relay de-energizes) in the following situations:
- in the event of power supply failure and
- if limit values are exceeded or undershot and
- if the connection cables between the upstream transmitter and the limit signal transmitter are disconnected.

In addition, the configured limit values for overfill protection must be secured against unintentional modification.

The following function must be activated if additional access protection should be provided for the configuration software:

Select **Setup / Expert** → **System** → **Overfill protect: German WHG**

Configuration when operating the device in accordance with the approval guidelines for overfill protection units:

The device must be set up and operated in accordance with these Operating Instructions pertaining to the device.

- Universal inputs must be configured (as described in Step 1 - Step 3 → 📄 24).
- Limit values must be configured as follows (as described in Step 5 → 📄 28):
  Function: MAX
  Assignment: which input signal should be monitored?
  Set point: maximum limit value to be monitored; value for the switching threshold
  Hysteresis: no hysteresis (=0)
  Time delay [1]: no switching delay (=0) or the set time must be taken into account for the tail quantity
- The device must be locked against access from unauthorized persons;
  User Code protects the configured parameters (like Step 6 → 📄 32):
  Enter the 4-digit code: select digit with '+' or '-' and press 'E' to confirm the individual digit; once the digit has been confirmed, the cursor moves to the next position, or skips back to the 'System' menu item once the fourth digit has been entered
  The lock symbol appears on the display.
- Select **Setup → System → Overfill protect**: German WHG.
  It is absolutely essential to assign the device to a WHG application. Confirming the 'Overfill protect: German WHG' parameter provides additional safety. The device status must be changed if the device is being configured using the FieldCare operating software, i.e. WHG must be disabled to be able to change parameters.

1) Can only be configured in the "Expert" menu

7.4.9 Expert menu

You activate the Expert mode by pressing **E → Expert**.

The Expert menu offers advanced device settings to adapt the device optimally to the application conditions.

Access to the Expert menu requires an access code. The factory default code is "0000". If a new access code is defined by the user, it replaces the access code assigned at the factory.

The Expert menu is enabled as soon as the correct access code has been entered.

The configuration options which the Expert mode also offers in addition to the normal setup parameters are described in the following section.

Input → Analog input 1/2

Bar 0%, Bar 100%

Change the scaling of the bar graph; default value: channel scaling

Decimal places

Specify the desired number of decimal places; default value: 2 decimal places

Damping

The input signal can be dampened by a low-pass filter.

The damping is specified in seconds (can be configured in steps of 0.1 s , max. 999.9 s).

Default values

Input type	Fixed value
Current and voltage inputs	0.0 s
Temperature inputs	1.0 s

Once 5 times the filter time has elapsed, 99% of the actual measured value is reached.

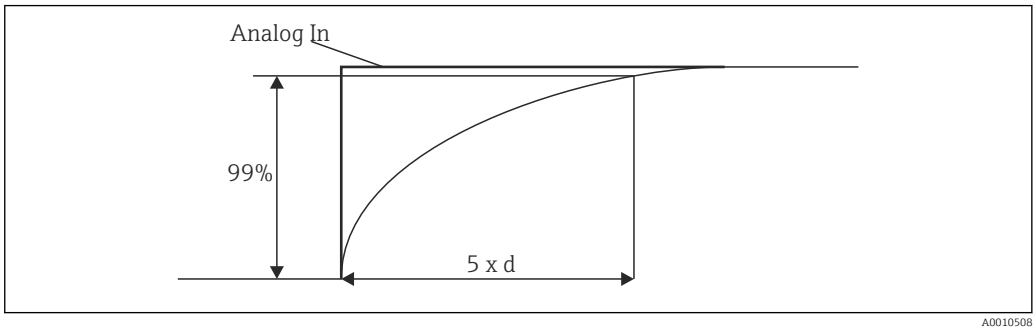

14 Signal damping

Analog In: Analog input signal

d: Set damping

Failure mode

If an error is detected at one of the two inputs, the internal status of the input is set to error. The behavior of the measured value in the event of an error can be defined here.

- Invalid = invalid value:
  The value is not calculated further as it is passed on as an invalid value.
- Fixed value = constant value:
  A constant value can be entered. This value is used if the device should perform further calculations. The input continues to be in the "error" state.

Namur NE43

Only for 4 to 20 mA. The measured value and the cables are monitored in accordance with NAMUR NE43 recommendations. See also → 37. Default value: enabled

Open circ detect

Only for 1 to 5 V. Input monitored for cable open circuit.

Failure delay

Delay time for failures, 0 to 99 s

Allow reset

If this function is activated, the min. and/or max. values can be reset outside the setup in the Display menu. Active access protection does not apply when this memory is reset.

Output → Analog output 1/2

Failure mode

- Min = stored minimum value:
  The stored minimum value is output.
- Max = stored maximum value:
  The stored maximum value is output.
- Fixed value = constant value:
  It is possible to enter a constant value that is output in the event of an error.

Output → Relay 1/2

Time delay

Sets the time delay for switching the relay

Operating mode

Operating mode of the relay.
- norm opened
- norm closed

Failure mode

- norm opened
- norm closed

NOTICE

Setting the limit relay failure mode

▶ The failure mode of the limit relay is configured in the setup. If an error occurs at an input to which a limit value is assigned, the limit relay adopts the configured status. The effect of the limit relay in the event of an error (energizes or de-energizes) must be specified in the setup. If a failure mode with a fixed error substitute value is configured in the assigned input, the corresponding relay does not react to the error at the input. Instead it checks the substitute value for limit value violation and switches depending on the limit value violation. The default value for the relay is "energized".

Application → Calc value 1/2

Failure mode

- Invalid:
  The calculated value is not valid and is not output.
- Fixed value:
  It is possible to enter a constant value that is output in the event of an error.

Diagnostics

Verify HW set

Following a hardware upgrade (e.g. additional relays, universal inputs etc.), it is necessary to perform hardware verification, i.e. the hardware is checked by the firmware in the device.

The "Verify HW set" function must be enabled in this case.

Simulation

The output value of the analog outputs and the switching state of the relays can be specified in the simulation mode. Simulation remains active until it is set to "off". The start and end of the simulation are saved in the diagnostic events.

Expert → Diagnostics → Simulation:
- Select the output to be simulated with the simulation value
- Select the relay to be simulated with the status

7.5 In operation

7.5.1 + and - quick pick keys

You can use the '+' and '-' quick pick keys to switch through all the active channels (universal inputs and calculated values) in the display mode. The measured value or the calculated value is then displayed for 5 seconds. The channel name pertaining to the value

displayed appears in the color section of the display. The maximum and minimum value are provided for each active channel.

Press the '+' and '-' simultaneously to exit a menu at any time. Any changes made are not saved.

7.5.2 Min/Max memory

The device records the highest and lowest values of the inputs and calculated values and saves them cyclically every 15 minutes in the nonvolatile memory.

Display:

Select the corresponding channel using the '+' and '-' quick pick keys.

Reset the min. and max. values:

Reset in the setup: select the channel (Analog in 1/2, Calc value 1/2), 'Reset min/max', min./max. values of the corresponding channel are reset.

A reset outside the setup (resetting without a user code) is only possible if this was enabled for the channel in the setup (Allow reset → 26). Press 'E' and select 'Display'. All the channels for which resetting outside the setup is permitted are displayed in succession. Select the corresponding channel and set to 'yes'. The channel is reset.

7.5.3 Device self-diagnosis, failsafe mode and cable open circuit detection/measuring range limits

The device monitors its inputs for a cable open circuit, as well as its own internal functions, by comprehensive monitoring mechanisms in the device software (e.g. cyclic memory test).

If the device self-diagnosis function detects an error, the device reacts as follows:
- Open collector output switches
- Red LED is lit
- Relay switches (if active and assigned as a fault/alarm relay)
- Display goes to error mode → color of channel affected changes to red and an error is displayed
- Display switches automatically between the active channels and the error

Troubleshooting instructions and a list of all the error messages can be found in the 'Troubleshooting' section → 40.

Measuring range limits

User interface							
User interface **Status** **Range**	- - - - - **F**	- - - - - **F** **Under range**	**Measured value** **Displayed and processed measured value**	- - - - - **F** **Over range**	- - - - - **F**	- - - - - **F** **Invalid measured value**	**Points to note**
0 to 20 mA			0 to 22 mA	> 22 mA		Not calibrated	Negative currents are not displayed or calculated (value remains at 0)
4 to 20 mA (without Namur)		≤ 2 mA	> 2 mA < 22 mA	≥ 22 mA		Not calibrated	
4 to 20 mA (as per Namur)	≤ 2 mA [1)] 2 < x ≤ 3.6 mA [2)]	> 3.6 mA... ≤ 3.8 mA	> 3.8 mA... < 20.5 mA	≥ 20.5 mA... < 21 mA	≥ 21 mA [2)]	Not calibrated	As per NAMUR 43
+/- voltage ranges		< -110%	-110% to 110%	> 110%		Not calibrated	

User interface							
User interface **Status** **Range**	- - - - - **F**	- - - - - **F** **Under range**	**Measured value** **Displayed and processed measured value**	- - - - - **F** **Over range**	- - - - - **F**	- - - - - **F** **Invalid measured value**	**Points to note**
Voltage ranges from 0 V		< -10%	-10% to 110%	> 110%		Not calibrated	
	No further calculation/further calculation with fixed error value		Further calculation in math and as min./max.				
Voltage range 1 to 5 V with activated cable open circuit detection	≤ 0.8 V		1 to 5 V		≥ 5.2 V	Not calibrated	
Thermocouples	Below the lower range limit [2]		0 to 100%		Above the upper range limit [2]		Cable open circuit detection from approx. 50 kΩ [1]
Resistance	Below the lower range limit [1]		0 to 100%		Above the upper range limit [1]		
	No further calculation/further calculation with fixed error value		Further calculation in math and as min./max.	No further calculation/further calculation with fixed error value			

1) Cable open circuit
2) Error at sensor

7.5.4 Saving diagnostic events/alarms and errors

Diagnostic events such as alarms and fault conditions are saved in the device as soon as a new error occurs or the status of the device changes. The events saved are written to the nonvolatile device memory every 30 minutes.

The device lists the following values in the 'Diagnostics' menu:
- Current device diagnostics
- Last device diagnostics
- Last 5 diagnostic messages

List of error codes, see the Troubleshooting section → 📄 40.

It is possible that events saved over the past 30 minutes might be lost.

7.5.5 Operating hours counter

The device has an internal operating hours counter which also acts as the reference for diagnostic events.

The operating hours are indicated in the 'Diagnostics' → 'Operating time' menu item. This information cannot be reset or changed.

7.5.6 Device reset

Various reset levels are available for a device reset.

‘Expert’ → ‘System’ → ‘Reset’ → ‘Factory reset’: reset all the parameters to the as-delivered state; all the configured parameters are overwritten.

If a user code has been defined, it is overwritten!!! When operation is locked by a user code, this is indicated by a lock symbol on the display.

‘Expert’ → ‘System’ → ‘Reset’ → ‘User reset’: parameters are loaded and configured in accordance with the user setup that is saved; the current configuration or factory settings are overwritten by the user setup.

If a user code has been defined, it is overwritten by the user code defined in the user setup!!! If no user code was saved in the user setup, the device is no longer locked. When operation is locked by a user code, this is indicated by a lock symbol on the display.

8 Diagnostics and troubleshooting

To help you troubleshoot, the following section is designed to provide an overview of possible causes of errors.

NOTICE

Device malfunction possible when retrofitting with untested hardware

- When retrofitting the device with additional hardware (relay, additional universal input and additional analog output), the device software must perform an internal hardware test). To do so, call up the "Verify HW set" function in the Expert→Diagnostics menu.

8.1 General troubleshooting

WARNING

Danger! Electric voltage!

- Do not operate the device in an open condition for device troubleshooting.

Error codes that appear on the display are described in the next section → 40. Further information on the failsafe mode is also provided in the "Commissioning" section → 37.

8.2 Overview of diagnostic information

Faults have the highest priority. The corresponding error code is displayed.

8.3 Diagnosis list

The errors are defined as:

Error code	Meaning	Remedy
F041	Sensor/cable open circuit	Check wiring
F045	Sensor error	Check sensor
F101	Below range	Check measurement, limit value violated
F102	Above range	
F221	Error: Reference junction	Contact your service organization.
F261	Error: Flash	Contact your service organization.
F261	Error: RAM	Contact your service organization.
F261	Error: EEPROM	Contact your service organization.
F261	Error: A/D converter, channel 1	Contact your service organization.
F261	Error: A/D converter, channel 2	Contact your service organization.
F261	Error: invalid device ID	Contact your service organization.
F281	Initialization phase	Contact your service organization.
F282	Error: parameter data could not be saved	Contact your service organization.
F283	Error: incorrect parameter data	Contact your service organization.
F431	Error: incorrect calibration values	Contact your service organization.
C411	Info: upload/download active	For information purposes only. Device is working properly.
C432	Info: calibration/test mode	For information purposes only. Device is working properly.

Error code	Meaning	Remedy
C482	Info: simulation mode, relay/open collector	For information purposes only. Device is working properly.
C483	Info: simulation mode, analog output	For information purposes only. Device is working properly.
C561	Display overrun	For information purposes only. Device is working properly.

9 Maintenance

No special maintenance work is required on the device.

10 Repairs

10.1 General notes

Repairs that are not described in these Operating Instructions must only be carried out directly by the manufacturer or by the service department.

If ordering spare parts, specify the serial number of the device. Where necessary, installation instructions are supplied with the spare part.

10.2 Spare parts

Accessories and spare parts currently available for your product can be found online at: **www.endress.com/spareparts_consumables** → **access to specific device information** → enter serial number.

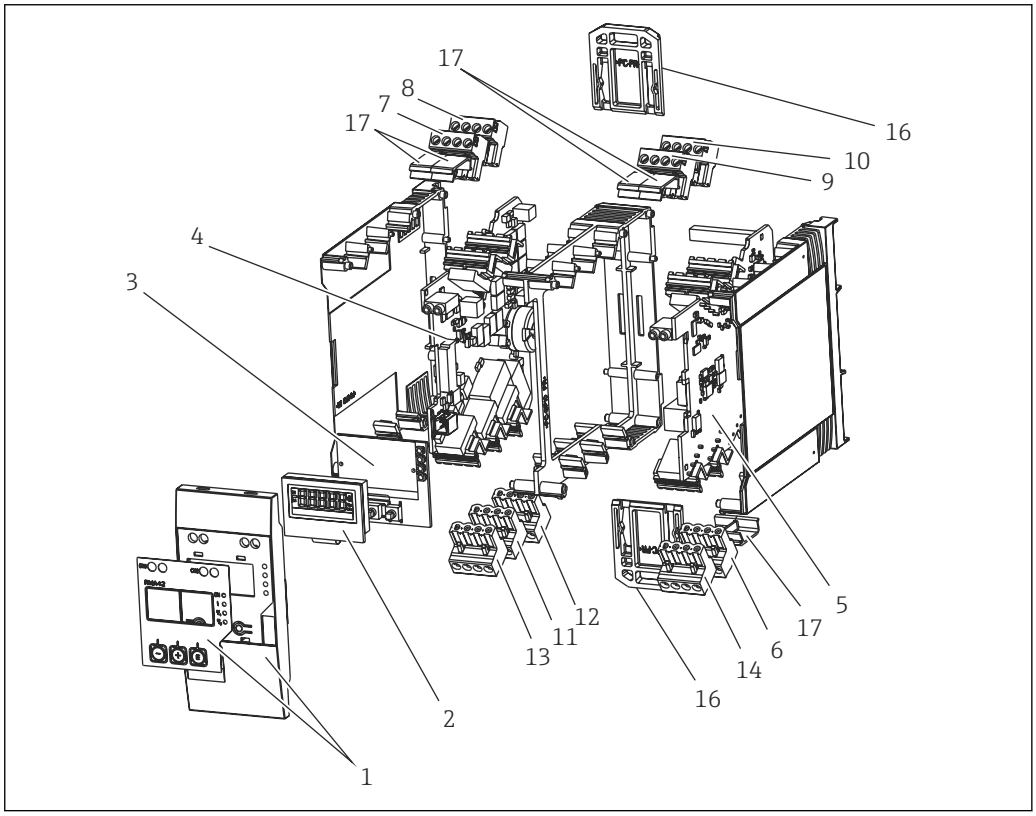

15 Spare parts

Item No.	Description
1	Front incl. front foil
2	Display
3	CPU board (without display)
4	Mainboard 1-channel without relay, non-Ex
	Mainboard 1-channel without relay, Ex
	Mainboard 1-channel with relay, non-Ex
	Mainboard 1-channel with relay, Ex
5	Powerboard without channel 2, non-Ex 24-230 V (-20% +10%)

Item No.	Description
	Powerboard without channel 2, Ex 24-230 V (-20% +10%)
	Powerboard with channel 2, non-Ex 24-230 V (-20% +10%)
	Powerboard with channel 2, Ex 24-230 V (-20% +10%)
6	4-pin terminals for supply voltage "N/- \ L/+"
7	Terminals, input 1 Ex, "11 12 13 14" blue
	Terminals, input 1 non-Ex, "11 12 13 14" gray
8	Terminals, input 1 Ex, "15 16 17 18" blue
	Terminals, input 1 non-Ex, "15 16 17 18" gray
9	Terminals, input 2 Ex, " 21 22 23 24" blue
	Terminals, input 2 non-Ex, " 21 22 23 24" gray
10	Terminals, input 2 Ex, "25 26 27 28" blue
	Terminals, input 2 non-Ex, "25 26 27 28" gray
11	Terminals, relay output 1 (R13, R11, R12)
12	Terminals, relay output 2 (R23, R21, R22)
13	Terminals, analog output 1 and status output (O16 O15 D12 D11)
14	Terminals, analog output 2 (O25, O26)
16	Fix slide (2 pcs)
17	Terminal cover set (5 pcs)

10.3 Return

The measuring device must be returned if it is need of repair or a factory calibration, or if the wrong measuring device has been delivered or ordered. Legal specifications require Endress+Hauser, as an ISO-certified company, to follow certain procedures when handling products that are in contact with the medium.

To ensure safe, swift and professional device returns, please refer to the procedure and conditions for returning devices provided on the Endress+Hauser website at http://www.endress.com/support/return-material

10.4 Disposal

The device contains electronic components and must therefore be disposed of as electronic waste. Comply with local disposal regulations.

11 Accessories

Various accessories, which can be ordered with the device or subsequently from Endress +Hauser, are available for the device. Detailed information on the order code in question is available from your local Endress+Hauser sales center or on the product page of the Endress+Hauser website: www.endress.com.

11.1 Communication-specific accessories

Designation
Interface cable
Commubox TXU10 incl. FieldCare Device Setup and DTM Library
Commubox FXA291 incl. FieldCare Device Setup and DTM Library

12 Technical data

12.1 Input

12.1.1 Measured variable

Current, voltage, resistance, resistance thermometer, thermocouples

12.1.2 Measuring ranges

Current:
- 0/4 to 20 mA +10% overrange
- Short-circuit current: max. 150 mA
- Load: 10 Ω

Voltage:
- 0 to 10 V, 2 to 10 V, 0 to 5 V, 0 to 1 V, 1 to 5 V, ±1 V, ±10 V, ±30 V, ±100 mV
- Max. permitted input voltage:
  Voltage ≥ 1 V: ±35 V
  Voltage < 1 V: ±12 V
- Input impedance: > 1 000 kΩ

Resistance:
30 to 3 000 Ω

Resistance thermometer:
- Pt100 as per IEC60751, GOST, JIS1604
- Pt500 and Pt1000 as per IEC60751
- Cu100, Cu50, Pt50, Pt46, Cu53 as per GOST
- Ni100, Ni1000 as per DIN 43760

Thermocouple types:
- Typ J, K, T, N, B, S, R as per IEC60584
- Typ U as per DIN 43710
- Typ L as per DIN 43710, GOST
- Typ C, D as per ASTM E998

12.1.3 Number of inputs

One or two universal inputs

12.1.4 Update time

200 ms

12.1.5 Galvanic isolation

Towards all other circuits

12.2 Output

12.2.1 Output signal

One or two analog outputs, galvanically isolated

Current/voltage output

Current output:
- 0/4 to 20 mA
- Overrange up to 22 mA

Voltage:
- 0 to 10 V, 2 to 10 V, 0 to 5 V, 1 to 5 V
- Overrange: up to 11 V, short-circuit proof, I_{max} < 25 mA

HART®

HART® signals are not affected

12.2.2 Loop power supply

- Open-circuit voltage: 24 V_{DC} (+15% /-5%)
  Ex version: > 14 V at 22 mA
  Non-hazardous operation: > 16 V at 22 mA
- Maximum 30 mA short-circuit-proof and overload-proof
- Galvanically isolated from system and outputs

12.2.3 Switching output

Open Collector for monitoring of the device state and alarm notification. The OC output is closed in normal state. In error state, the OC output is opened.

- I_{max} = 200 mA
- U_{max} = 28 V
- $U_{on/max}$ = 2 V at 200 mA

Galvanic isolation towards all other circuits; test voltage 500 V

12.2.4 Relay output

Relay output for limit function

Relay contact	Changeover
Maximum contact burden DC	30 V / 3 A (permanent state, without destruction of the input)
Maximum contact burden AC	250 V / 3 A (permanent state, without destruction of the input)
Minimum contact load	500 mW (12 V/10 mA)
Galvanic isolation towards all other circuits	Test voltage 1 500 V_{AC}
Switching cycles	> 1 million

12.3 Power supply

12.3.1 Terminal assignment

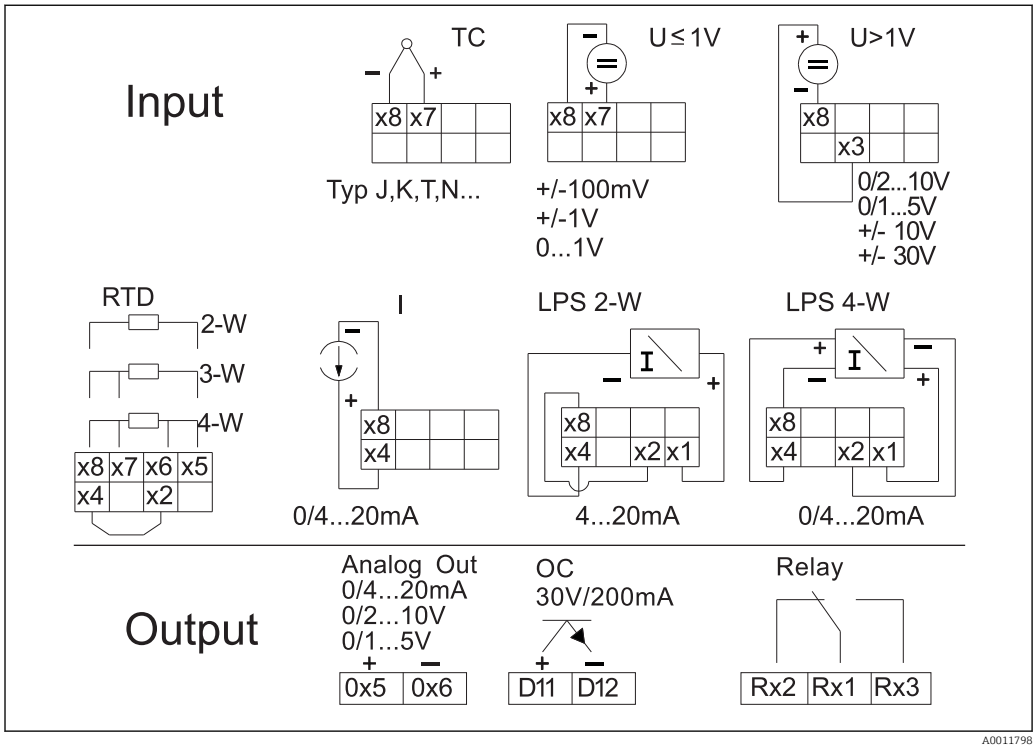

16 *Terminal assignment of the process transmitter (relays (terminals Rx1-Rx3) and channel 2 (terminals 21-28 and O25/O26) optional)*

12.3.2 Supply voltage

Wide-area power supply unit 24 to 230 V AC/DC (-20 % / +10 %) 50/60 Hz

12.3.3 Power consumption

Max. 21.5 VA / 6.9 W

12.3.4 Connection data interface

Commubox FXA291 PC USB interface

- Connection: 4-pin connector
- Transmission protocol: FieldCare
- Transmission rate: 38,400 Baud

Interface cable TXU10-AC PC USB interface

- Connection: 4-pin connection
- Transmission protocol: FieldCare
- Delivery scope: Interface cable incl. FieldCare Device Setup DVD with all Comm DTMs and Device DTMs

12.4 Performance characteristics

12.4.1 Reference operating conditions

Power supply: 230 V_{AC}, 50/60 Hz

Ambient temperature: 25 °C (77 °F) ± 5 °C (9 °F)

Humidity: 20 %...60 % rel. humidity

12.4.2 Maximum measured error

Universal input:

Accuracy	Input:	Range:	Maximum measured error of measuring range (oMR):
	Current	0 to 20 mA, 0 to 5 mA, 4 to 20 mA; Overrange: up to 22 mA	±0.05%
	Voltage ≥ 1 V	0 to 10 V, 2 to 10 V, 0 to 5 V, 1 to 5 V, 0 to 1 V, ±1 V, ±10 V, ±30 V	±0.1%
	Voltage < 1 V	±100 mV	±0.05%
	Resistance measurement	30 to 3 000 Ω	4-wire: ± (0.10% oMR + 0.8 Ω) 3-wire: ± (0.10% oMR + 1.6 Ω) 2-wire: ± (0.10% oMR + 3 Ω)
	RTD	Pt100, −200 to 850 °C (−328 to 1 562 °F) (IEC60751, α=0.00385) Pt100, −200 to 850 °C (−328 to 1 562 °F) (JIS1604, w=1.391) Pt100, −200 to 649 °C (−328 to 1 200 °F) (GOST, α=0.003916) Pt500, −200 to 850 °C (−328 to 1 562 °F) (IEC60751, α=0.00385) Pt1000, −200 to 600 °C (−328 to 1 112 °F) (IEC60751, α=0.00385)	4-wire: ± (0.10% oMR + 0.3 K (0.54 °F)) 3-wire: ± (0.10% oMR + 0.8 K (1.44 °F)) 2-wire: ± (0.10% oMR + 1.5 K (2.7 °F))
		Cu100, −200 to 200 °C (−328 to 392 °F) (GOST, w=1.428) Cu50, −200 to 200 °C (−328 to 392 °F) (GOST, w=1.428) Pt50, −200 to 1 100 °C (−328 to 2 012 °F) (GOST, w=1.391) Pt46, −200 to 850 °C (−328 to 1 562 °F) (GOST, w=1.391) Ni100, −60 to 250 °C (−76 to 482 °F) (DIN43760, α=0.00617) Ni1000, −60 to 250 °C (−76 to 482 °F) (DIN43760, α=0.00617)	4-wire: ± (0.10% oMR + 0.3 K (0.54 °F)) 3-wire: ± (0.10% oMR + 0.8 K (1.44 °F)) 2-wire: ± (0.10% oMR + 1.5 K (2.7 °F))
		Cu53, −50 to 200 °C (−58 to 392 °F) (GOST, w=1.426)	4-wire: ± (0.10% oMR + 0.3 K (0.54 °F)) 3-wire: ± (0.10% oMR + 0.8 K (1.44 °F)) 2-wire: ± (0.10% oMR + 1.5 K (2.7 °F))
	Thermocouples	Typ J (Fe-CuNi), −210 to 1 200 °C (−346 to 2 192 °F) (IEC60584)	± (0.10% oMR +0.5 K (0.9 °F)) from −100 °C (−148 °F)
		Typ K (NiCr-Ni), −200 to 1 372 °C (−328 to 2 502 °F) (IEC60584)	± (0.10% oMR +0.5 K (0.9 °F)) from −130 °C (−202 °F)
		Typ T (Cu-CuNi), −270 to 400 °C (−454 to 752 °F) (IEC60584)	± (0.10% oMR +0.5 K (0.9 °F)) from −200 °C (−328 °F)
		Typ N (NiCrSi-NiSi), −270 to 1 300 °C (−454 to 2 372 °F) (IEC60584)	± (0.10% oMR +0.5 K (0.9 °F)) from −100 °C (−148 °F)
		Typ L (Fe-CuNi), −200 to 900 °C (−328 to 1 652 °F) (DIN43710, GOST)	± (0.10% oMR +0.5 K (0.9 °F)) from −100 °C (−148 °F)

Accuracy	Input:	Range:	Maximum measured error of measuring range (oMR):
		Typ D (W3Re/W25Re), 0 to 2 495 °C (32 to 4 523 °F) (ASTME998)	± (0.15% oMR +1.5 K (2.7 °F)) from 500 °C (932 °F)
		Typ C (W5Re/W26Re), 0 to 2 320 °C (32 to 4 208 °F) (ASTME998)	± (0.15% oMR +1.5 K (2.7 °F)) from 500 °C (932 °F)
		Typ B (Pt30Rh-Pt6Rh), 0 to 1 820 °C (32 to 3 308 °F) (IEC60584)	± (0.15% oMR +1.5 K (2.7 °F)) from 600 °C (1 112 °F)
		Typ S (Pt10Rh-Pt), −50 to 1 768 °C (−58 to 3 214 °F) (IEC60584)	± (0.15% oMR +3.5 K (6.3 °F)) für −50 to 100 °C (−58 to 212 °F) ± (0.15% oMR +1.5 K (2.7 °F)) from 100 °C (212 °F)
		Typ U (Cu-CuNi), −200 to 600 °C (−328 to 1 112 °F) (DIN 43710)	± (0.15% oMR +1.5 K (2.7 °F)) from 100 °C (212 °F)
AD converter resolution		16 bit	
Temperature drift		Temperature drift: ≤ 0.01%/K (0.1%/18 °F) oMR ≤ 0.02%/ K (0.2%/18 °F) oMR for Cu100, Cu50, Cu53, Pt50 and Pt46	

Analog output:

Current	0/4 to 20 mA, overrange bis 22 mA	±0.05% of measuring range
	Max. load	500 Ω
	Max. inductivity	10 mH
	Max. capacity	10 µF
	Max. ripple	10 mVpp at 500 Ω, frequency < 50 kHz
Voltage	0 to 10 V, 2 to 10 V 0 to 5 V, 1 to 5 V Overrange: up to 11 V, shortcircuit proof, I_{max} < 25 mA	±0.05% of measuring range ±0.1 % of measuring range
	Max. ripple	10 mVpp at 1 000 Ω, frequency < 50 kHz
Resolution	13 bit	
Temperature drift	≤ 0.01%/K (0.1%/18 °F) of measuring range	
Galvanic isolation	Testing voltage of 500 V towards all other circuits	

12.5 Installation

12.5.1 Mounting location

Mounting on top-hat rail as per IEC 60715.

12.5.2 Orientation

Vertical or horizontal.

NOTICE

Heat accumulation when installing several devices on a vertically mounted top-hat rail

- Keep sufficient gaps between the individual devices.

12.6 Environment

12.6.1 Ambient temperature range

NOTICE

The life-time of the display is shortened when operated in the upper temperature range.

▶ To avoid heat accumulation, always make sure the device is sufficiently cooled.

Non-Ex/Ex devices: −20 to 60 °C (−4 to 140 °F)

UL devices: −20 to 50 °C (−4 to 122 °F)

12.6.2 Storage temperature

−40 to 85 °C (−40 to 185 °F)

12.6.3 Operating height

< 2 000 m (6 560 ft) above MSL

12.6.4 Climate class

As per IEC 60654-1, Klasse B2

12.6.5 Degree of protection

Top-hat rail housing IP 20

12.6.6 Electrical safety

Protection class II, overvoltage category II, pollution degree 2

12.6.7 Condensation

Not permitted

12.6.8 Electromagnetic compatibility (EMC)

- Interference immunity:
  To IEC 61326 industrial environments / NAMUR NE 21
- Interference emissions:
  To IEC 61326 Class A

12.7 Mechanical construction

12.7.1 Design, dimensions

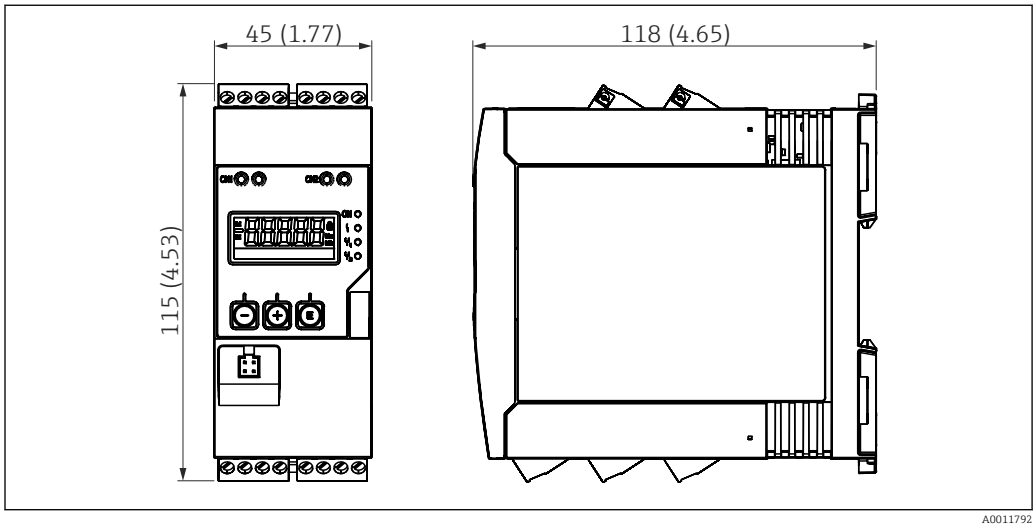

17 Dimensions of the process transmitter in mm (in)

12.7.2 Weight

Approximately 300 g (10.6 oz)

12.7.3 Material

Housing: plastic PC-GF10

12.7.4 Terminals

Screw terminals, plug-in, 2.5 mm^2 (14 AWG), 0.1 to 4 mm^2 (30 to 12 AWG), torque 0.5 to 0.6 Nm (0.37 to 0.44 lbf ft)

12.8 Operability

12.8.1 Local operation

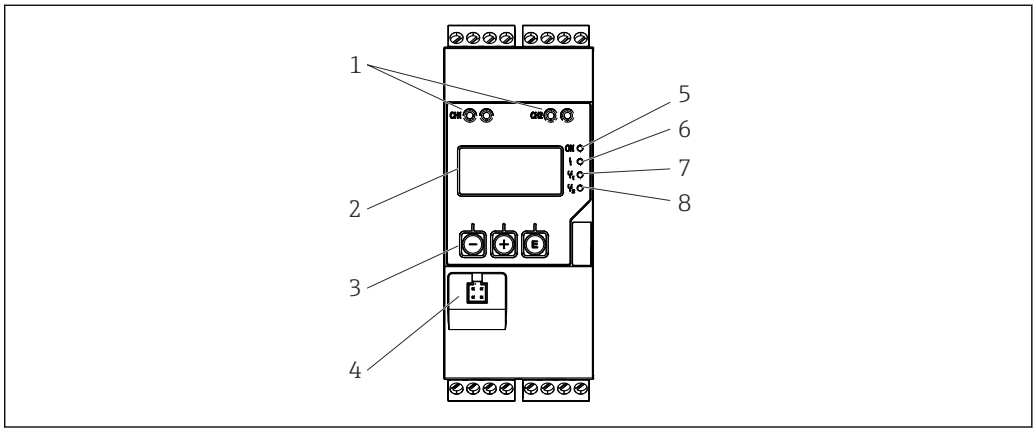

18 *Display and operating elements of the process transmitter*

1 *HART® connection sockets*
2 *Display*
3 *Operating keys*
4 *PC interface connection port*
5 *Green LED; on = supply voltage applied*
6 *Red LED; on = error/alarm*
7 *Yellow LED; on = relay 1 energized*
8 *Yellow LED; on = relay 2 energized*

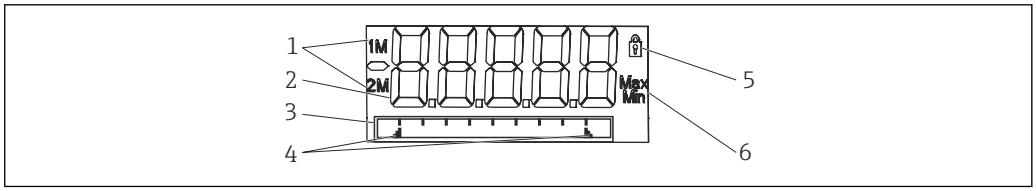

19 *Display of the process transmitter*

1 *Channel display: 1: analog input 1; 2: analog input 2; 1M: calculated value 1; 2M: calculated value 2*
2 *Measured value display*
3 *Dot matrix display for TAG, bar graph and unit*
4 *Limit value indicators in the bar graph*
5 *"Operation locked" indicator*
6 *Minimum/maximum value indicator*

- Display
  5-digit, 7-segment backlit LC display
  Dot matrix for text/bar graph
- Display range
  -99999 to +99999 for measured values
- Signaling
  – Setup security locking (lock)
  – Measuring range overshoot/undershoot
  – 2 x status relay (only if relay option was selected)

Operating elements

3 keys: -, +, E

12.8.2 Remote operation

Configuration

The device can be configured with the PC software or on site using the operating keys. FieldCare Device Setup is delivered together with the Commubox FXA291 or TXU10-AC (see ’Accessories’) or can be downloaded free of charge from www.endress.com.

Interface

4-pin socket for the connection with a PC via Commubox FXA291 or TXU10-AC interface cable (see 'Accessories')

12.9 Certificates and approvals

12.9.1 CE mark

The measuring system meets the legal requirements of the applicable EC guidelines. These are listed in the corresponding EC Declaration of Conformity together with the standards applied. Endress+Hauser confirms successful testing of the device by affixing to it the CE mark.

12.9.2 EAC mark

The product meets the legal requirements of the EEU guidelines. The manufacturer confirms the successful testing of the product by affixing the EAC mark.

12.9.3 Ex approval

Information about currently available Ex versions (ATEX, FM, CSA, etc.) can be supplied by your E+H Sales Center on request. All explosion protection data are given in a separate documentation which is available upon request.

12.9.4 Overfill prevention

WHG-compliant limit signal transmitter (optional)

12.9.5 Functional safety

SIL2 (optional)

12.9.6 Marine approvals

German Lloyd (GL, optional)

12.9.7 UL

UL recognized component (see www.ul.com/database, search by keyword "E225237")

12.9.8 CSA

CSA General Purpose (CSA GP)

12.9.9 Power station

Seismic test according to KTA3505 (optional)

12.9.10 Other standards and guidelines

- IEC 60529:
  Degrees of protection provided by enclosures (IP code)
- IEC 61010-1:
  Safety Requirements for Electrical Equipment for Measurement, Control and Laboratory Use
- EN 60079-11:
  Explosive atmospheres - Part 11: Equipment protection by intrinsic safety "I" (optional)

12.10 Supplementary documentation

- System components and data manager - solutions to complete your measuring point:
  FA00016K/09
- Technical Information, process transmitter RMA42: TI00150R/09
- Ex-related additional documentation:
  ATEX II (1)G [Ex ia] IIC, ATEX II (1)D [Ex ia] IIIC: XA00095R/09
- SIL Safety Manual:
  SD00025R/09

13 Appendix

The following tables show all the parameters available in the configuration menu. The values configured at the factory are marked in bold.

13.1 Further explanations on the differential pressure application at level measurement

At both universal inputs pressure sensors are connected. With the following calculation steps the volume in the CV channels is finally calculated:

13.1.1 1st Calculation Step: Calculation of the filling level

Both pressure sensors provide the actual pressure at the installation point.From both pressures (possibly adjusted for an offset; this has to be set in AI1 respectively AI2) a pressure difference (Δp) is determined. If the pressure difference is divided through the density of the medium multiplied with the gravitational acceleration the measured height is gained.

Level h= Δp/(ρ*g)

The following units form the basis of the calculation:
- Density ρ [kg/m³]
- Pressure p: [Pa] or [N/m²]

The gravitational acceleration is defined by a constant:

Gravitational acceleration g=9.81m/s²

NOTICE

Wrong calculation results through use of incorrect engineering units

- ▶ If the calculation is to be carried through correctly the measured signal (e.g. in mbar) has to be converted into the according unit Pascal (Pa). This is achieved by a conversion factor. Conversion factors can be found in the table → 📄 57.

Examples for the conversion:

Water: density ρ=1 000 kg/m³

Pressure measurement: pressure1 (bottom): Scale 0 to 800 mbar (0 to 80000 Pa);

Present value: 500 mbar (50000 Pa)

Pressure measurement: pressure2 (top): Scale 0 to 800 mbar (0 to 80000 Pa);

Present value: 150 mbar (15000Pa)

When using Pascal:

$$h = \frac{1}{1000\ \mathrm{kg/m^3} * 9.81\ \mathrm{m/s^2}} * (50000\text{-}15000\ \mathrm{Pa}) = 3.57\ \mathrm{m}$$

When using mbar:

$$h = \frac{1}{1000\ \mathrm{kg/m^3} * 9.81\ \mathrm{m/s^2}} * ((500 - 150\ \mathrm{mbar})) * (1.0000 \cdot 10^2)) = 3.57\ \mathrm{m}$$

h = b * Δp

Calculation of the correction factor b:

b = 1/(ρ*g)

for water: b = 1/(1000*9.81) = 0.00010194

Tables and examples for the conversion of application related units into the defined values kg/m³ and Pa or N/m²:

- 1 bar = 0,1 N/mm² = 10^5 N/m² = 10^5 Pa
- 1 mbar = 1 hPa = 100 Pa

Conversion factors for various pressure engineering units

	Pascal	Bar	Technical Atmosphere	Physical Atmosphere	Torr	Pounds per square inch
	[Pa]	[bar]	[at]	[atm]	[torr]	[psi]
	= 1 N/m²	= 1 Mdyn/cm²	= 1 kp/cm²	= 1 pSTP	= 1 mmHg	= 1 lbf/in²
1 Pa =	1	$1.000 \cdot 10^{-4}$	$1.0197 \cdot 10^{-5}$	$9.8692 \cdot 10^{-6}$	$7.5006 \cdot 10^{-3}$	$1.4504 \cdot 10^{-4}$
1 bar =	$1.000 \cdot 10^{5}$	1	$1.0197 \cdot 10^{0}$	$9.8692 \cdot 10^{-1}$	$7.5006 \cdot 10^{2}$	$1.4504 \cdot 10^{1}$
1 mbar =	$1.000 \cdot 10^{2}$	$1.000 \cdot 10^{-3}$	$1.0197 \cdot 10^{3}$	$9.8692 \cdot 10^{-4}$	$7.5006 \cdot 10^{-1}$	$1.4504 \cdot 10^{-2}$
1 at =	$9.8067 \cdot 10^{4}$	$9.8067 \cdot 10^{-1}$	1	$9.6784 \cdot 10^{-1}$	$7.3556 \cdot 10^{2}$	$1.4223 \cdot 10^{1}$
1 atm =	$1.0133 \cdot 10^{5}$	$1.0133 \cdot 10^{0}$	$1.0332 \cdot 10^{0}$	1	$7.6000 \cdot 10^{2}$	$1.4696 \cdot 10^{1}$
1 torr =	$1.3332 \cdot 10^{2}$	$1.3332 \cdot 1^{-3}$	$1.3595 \cdot 10^{-3}$	$1.3158 \cdot 10^{-3}$	1	$1.9337 \cdot 10^{-2}$
1 psi =	$6.8948 \cdot 10^{3}$	$6.8948 \cdot 1^{-3}$				

Density:

The density has to be taken from the specifications of the medium that the tank contains.

In the given table standard approximate values that can help for a first orientation are listed

Medium	Density in [kg/m³]
Water (at 3.98 °C (39.164 °F))	999.975
Mercury	13 595
Bromine	3 119
Sulfuric acid	1 834
Nitric acid	1 512
Glycerin	1 260
Nitrobenzene	1 220
Deuterium oxide	1 105
Acetic Acid	1 049
Milk	1 030
Seawater	1 025
Aniline	1 022
Olive oil	910
Benzene	879
Toluene	872
Spirits of turpentine	855
Spirit	830
Diesel fuel	830
Paraffin	800
Methanol	790
Ethyl alcohol	789
Automotive gas (standardized, average value)	750
Acetone	721

Medium	Density in [kg/m³]
Disulfide	713
Diethyl ether	713

13.1.2 2nd Calculation step: Calculation of the volume out of the height

By means of the linearization of the calculated height value the volume can be calculated.

This is done by assigning a certain volume value to every height value in dependency of the tank shape.

This linearization is mapped over up to 32 supporting points. However, at a straight-linear dependency of filling height and volume are sufficient.

The integrated tank-linearization module in FieldCare provides support here.

13.2 Display menu

AI1/AI2 Reset minmax

Navigation	Display → AI1 Reset minmax/AI2 Reset minmax
Description	Resets the minimum and maximum values saved for analog input 1 or analog input 2.
Options	yes no
Factory setting	no
Additional information	Only available if "Yes" was configured in the Setup → Analog in 1/Analog in 2 → Allow reset menu.

Cv1/Cv2 Reset minmax

Navigation	Display → Cv1 Reset minmax/Cv2 Reset minmax
Description	Resets the minimum and maximum values saved for math 1 or math 2.
Options	yes no
Factory setting	no
Additional information	Only available if "Yes" was configured in the Setup → Calc val 1/Calc val 2 → Allow reset menu.

Analog in 1/2

Navigation	Display → Analog in 1/Analog in 2
Description	Configures the display for analog input 1 or analog input 2. If the parameter is set to ‘Off’, the channel is not displayed.
Options	off Unit Bargraph Bar + unit Tag + unit
Factory setting	Tag + unit

Calc value 1/2

Navigation	Display → Calc value 1/Calc value 1
Description	Configures the display for math 1 or math 2. If the parameter is set to 'Off', the channel is not displayed.
Options	off Unit Bargraph Bar + unit Tag + unit
Factory setting	off

Contrast

Navigation	Display → Contrast
Description	Configures the contrast
Options	1...7
Factory setting	6

Brightness

Navigation	Display → Brightness
Description	Configures the brightness
Options	1...7
Factory setting	6

Alternating time

Navigation	Display → Alternating time
Description	Configures the time for toggling between the channels displayed.
Options	3 seconds 5 seconds 10 seconds
Factory setting	5 seconds

13.3 Setup menu

Application

Navigation	Setup → Application
Description	Configures the application for the process display unit.
Options	1-channel 2-channel Diff pressure
Factory setting	1- / 2-channel
Additional information	2-channel is the default setting for two-channel devices, 1-channel for single-channel devices.

AI1/AI2 Lower range

Navigation	Setup → AI1 Lower range/AI2 Lower range
Description	Configures the measuring range lower limit
User entry	Numerical value[1)]
Factory setting	0.0000
Additional information	Only visible if → Diff pressure is configured as the application.

AI1/AI2 Upper range

Navigation	Setup → AI1 Upper range/AI2 Upper range
Description	Configures the measuring range upper limit
User entry	Numerical value[1)]
Factory setting	100.00
Additional information	Only visible if → Diff pressure is configured as the application.

CV factor

Navigation	Setup → CV factor
Description	Factor by which the calculated value is multiplied.
User entry	Numerical value[1)]
Factory setting	1.0
Additional information	Only visible if → Diff pressure is configured as the application.

CV unit

Navigation	Setup → CV unit
Description	Unit of the calculated value
Options	Customized text, max. 5 digits
Additional information	Only visible if → Diff pressure is configured as the application.

CV Bar 0%

Navigation	Setup → CV Bar 0%
Description	Configures the 0%-value for the bar graph
User entry	Numerical value[1)]
Factory setting	0.0000
Additional information	Only visible if → Diff pressure is configured as the application.

CV Bar 100%

Navigation	Setup → CV Bar 100%
Description	Configures the 100%-value for the bar graph
User entry	Numerical value[1)]

Factory setting 100.00
Additional information Only visible if → Diff pressure is configured as the application.

Submenu "Linearization"

Navigation Setup → Linearization

Description Only visible if → Diff pressure is configured as the application.

No lin points

Navigation Setup → Linearization → No lin points

Description Number of points needed for linearization.
User entry 2...32
Factory setting 2

X-value 1...X-value 32

Navigation Setup → Linearization → X-value 1...X-value 32

Description X-value for the linearization point in question
User entry Numerical value[1)]
Factory setting 0.0000

Y-value 1...Y-value 32

Navigation Setup → Linearization → Y-value 1...Y-value 32

Description Y-value for the linearization point in question
User entry Numerical value[1)]
Factory setting 0.0000

Submenu "Analog in 1"/"Analog in 2"

Navigation Setup → Analog in 1/Analog in 2

Additional information Settings for analog input 1 or analog input 2

Signal type

Navigation Setup → Analog in 1/Analog in 2 → Signal type

Description Configures the input type.
Options off
Current
Voltage
RTD
TC
Factory setting Current
Additional information If "Signal type" is set to "Off", all the parameters under it are hidden.

Signal range

Navigation	Setup → Analog in 1/Analog in 2 → Signal range
Description	Configures the input signal. Which options are available for selection depends on the "Signal type" set.
Options	4-20mA, 4-20mA squar, 0-20mA, 0-20mA squar 0-10V, 0-10V squar, 0-5V, 2-10V, 1-5V, 1-5V squar, 0-1V, 0-1V squar, +/- 1V, +/- 10V, +/- 30V, +/- 100mV Pt46GOST, Pt50GOST, Pt100IEC, Pt100JIS, Pt100GOST, Pt500IEC, Pt1000IEC, Ni100DIN, Ni1000DIN, Cu50GOST, Cu53GOST, Cu100GOST, 3000 Ohm Typ B, Typ J, Typ K, Typ N, Typ R, Typ S, Typ T, Typ C, Typ D, Typ L, Typ L GOST, Typ U
Factory setting	4-20mA, 0-10V, Pt100IEC, Typ J; depending on the selected input signal

Lower range

Navigation	Setup → Analog in 1/Analog in 2 → Lower range
Description	Configures the measuring range lower limit
User entry	Numerical value[1)]
Factory setting	0
Additional information	Only displayed if "Signal type" = "Current" or "Voltage" is set.

Upper range

Navigation	Setup → Analog in 1/Analog in 2 → Upper range
Description	Configures the measuring range upper limit
User entry	Numerical value[1)]
Factory setting	100
Additional information	Only displayed if "Signal type" = "Current" or "Voltage" is set.

Connection

Navigation	Setup → Analog in 1/Analog in 2 → Connection
Description	Configures the connection type for RTD thermometers
Options	2-wire 3-wire 4-wire
Factory setting	2-wire
Additional information	Only displayed if "Signal type" = "RTD" is set.

Tag

Navigation	Setup → Analog in 1/Analog in 2 → Tag
Description	Channel name; TAG i the device designation for channel 1
User entry	Customized text, max. 12 digits

Unit

Navigation	Setup → Analog in 1/Analog in 2 → Unit
Description	Unit of the channel
Input	Customized text, max. 5 digits
Additional information	Only displayed if "Signal type" = "Current" or "Voltage" is set.

Temperature unit

Navigation	Setup → Analog in 1/Analog in 2 → Temperature unit
Description	Configures the temperature unit
Options	°C °F K
Factory settings	°C
Additional information	Only displayed if "Signal type" = "RTD" or "TC" is set.

Offset

Navigation	Setup → Analog in 1/Analog in 2 → Offset
Description	Configures an offset
User entry	Numerical value[1)]
Factory setting	0

Ref junction

Navigation	Setup → Analog in 1/Analog in 2 → Ref junction
Description	Configures the reference temperature
Options	intern fixed
Factory setting	intern
Additional information	Only displayed if "Signal type" = "TC" is set.

Fixed ref junc

Navigation	Setup → Analog in 1/Analog in 2 → Fixed ref junc
Description	Configures the constant reference temperature
User entry	Numerical value[1)]
Additional information	Only visible if "fixed" was selected for the "Ref junction".

Reset min/max

Navigation	Setup → Analog in 1/Analog in 2 → Reset min/max

Description	Resets the min./max. values saved.
Options	no yes
Factory setting	no

Submenu "Calc value 1"/"Calc value 2"

Navigation	Setup → Calc value 1/Calc value 2
Additional information	Settings for math 1 or math 2

Calculation

Navigation	Setup → Calc value 1/Calc value 2 → Calculation
Description	Selects the calculation method.
Options	off Sum Difference Average Lineariz. AI1 / Lineariz. AI2 Lineariz. CV1 (Calc value 2 only) Multiplication
Factory setting	off
Additional information	If "Calculation" is set to "Off", all the parameters under it are hidden.

Tag

Navigation	Setup → Calc value 1/Calc value 2 → Tag
Description	Channel name
User entry	Customized text, max. 12 digits

Unit

Navigation	Setup → Calc value 1/Calc value 2 → Unit
Description	Unit of the channel
User entry	Customized text, max. 5 digits

Bar 0%

Navigation	Setup → Calc value 1/Calc value 2 → Bar 0%
Description	Configures the 0%-value for the bar graph
User entry	Numerical value[1)]
Factory setting	0

Bar 100%

Navigation	Setup → Calc value 1/Calc value 2 → Bar 100%

Description	Configures the 100%-value for the bar graph
User entry	Numerical value[1)]
Factory setting	100

Factor

Navigation	Setup → Calc value 1/Calc value 2 → Factor
Description	Setting of factor for calculated value
User entry	Numerical value[1)]
Factory setting	1.0

Offset

Navigation	Setup → Calc value 1/Calc value 2 → Offset
Description	Configures an offset
User entry	Numerical value[1)]
Factory setting	0

No. lin points

Navigation	Setup → Calc value 1/Calc value 2 → No. lin points
Description	Number of points for linearization.
User entry	2…32
Factory setting	2
Additional information	Only visible if "Calculation" = "Linearization" was set.

X-value

Navigation	Setup → Calc value 1/Calc value 2 → X-value
Description	For entering the points for linearization (max. 32)
User entry	X-value 1…X-value 32, numerical value[1)]
Factory setting	0
Additional information	Only visible if "Calculation" = "Linearization" was set.

Y-value

Navigation	Setup → Calc value 1/Calc value 2 → Y-value
Description	For entering the points for linearization (max. 32)
User entry	Y-value 1…Y-value 32, numerical value[1)]
Factory setting	0
Additional information	Only visible if "Calculation" = "Linearization" was set.

Reset min/max

Navigation	Setup → Calc value 1/Calc value 2 → Reset min/max

Description Resets the min./max. values saved.
Options no
yes
Factory setting no

Submenu "Analog Out 1"/"Analog Out 2"

Navigation Setup → Analog Out 1/Analog Out 2

Additional information Settings for analog output 1 or analog output 2

Assignment

Navigation Setup → Analog Out 1/Analog Out 2 → Assignment

Description Selects the source for the output signal
Options off
Analog 1
Analog 2
Calc Val 1
Calc Val 2
Factory setting off

Signal type

Navigation Setup → Analog Out 1/Analog Out 2 → Signal type

Description Selects the type of signal for the output signal
Options 4-20mA
0-20mA
0-10V
2-10V
0-5V
1-5V
Factory setting 4-20mA

Lower range

Navigation Setup → Analog Out 1/Analog Out 2 → Lower range

Description Configures the measuring range lower limit
User entry Numerical value[1)]
Factory setting 0

Upper range

Navigation Setup → Analog Out 1/Analog Out 2 → Upper range

Description Configures the measuring range upper limit
User entry Numerical value[1)]
Factory setting 100

Submenu "Relay 1"/"Relay 2"

Navigation	Setup → Relay 1/Relay 2
Additional information	Settings for relay 1 or relay 2

Source

Navigation	Setup → Relay 1/Relay 2 → Source
Description	Selects the source for the relay
Options	off Analog input 1 Analog input 2 Calc value 1 Calc value 2 Error
Factory setting	off

Function

Navigation	Setup → Relay 1/Relay 2 → Function
Description	Function of the relay
Options	Min Max Gradient Inband Outband
Factory setting	Min

Setpoint

Navigation	Setup → Relay 1/Relay 2 → Setpoint
Description	Switching threshold for relay
User entry	Numerical value[1)]
Factory setting	0

Setpoint 2

Navigation	Setup → Relay 1/Relay 2 → Setpoint 2
Description	Second switching threshold for relay.
User entry	Numerical value[1)]
Factory setting	0
Additional information	Only for the inband and outband functions.

Time base

Navigation	Setup → Relay 1/Relay 2 → Time base

Description	Time base for gradient calculation in seconds
User entry	0-60
Factory setting	0
Additional information	Only visible if "Function" = "Gradient" was set

Hysteresis

Navigation	Setup → Relay 1/Relay 2 → Hysteresis
Description	Hysteresis for switching threshold(s)
User entry	Numerical value[1)]
Factory setting	0

Submenu "System"

Navigation	Setup → System

Access code

Navigation	Setup → System → Access code
Description	User code to protect the device configuration.
User entry	0000...9999
Factory setting	0000
Additional information	0000 = protection through user code disabled

Overfill protect

Navigation	Setup → System → Overfill protect
Description	If the device is used for overfill protection → 33, "Yes" must be selected for "Overfill protect".
Options	no yes
Factory setting	no

Reset

Navigation	Setup → System → Reset
Description	Resets the device to the order configuration.
Options	no yes
Factory setting	no

1) Numerical values consist of 6 digits where the decimal point counts as a digit, e.g. +99.999

13.4 Diagnostics menu

Current diagn

Navigation Diagnostics → Current diagn

Description Displays the error code currently present

Last diagn

Navigation Diagnostics → Last diagn

Description Displays the last error code

Operating time

Navigation Diagnostics → Operating time

Description Displays the hours operated up until now

Submenu "Diagnost logbook"

Navigation Diagnostics → Diagnost logbook

Description Displays the last 5 error codes

Diagnostics x

Navigation Diagnostics → Diagnost logbook → Diagnostics x

Description Displays a message from the diagnostics logbook.

Submenu "Device information"

Navigation Diagnostics → Device information

Device tag

Navigation Diagnostics → Device information → Device tag

Description Displays the device name i TAG channel 1

Serial number

Navigation Diagnostics → Device information → Serial number

Description Displays the serial number

Order code

Navigation Diagnostics → Device information → Order code

Description Displays the order code

Order identifier

Navigation Diagnostics → Device information → Order identifier

Description Displays the order number

Firmware version

Navigation Diagnostics → Device information → Firmware version

Description Displays the firmware version

ENP Version

Navigation Diagnostics → Device information → ENP Version

Description Displays the ENP version

13.5 Expert menu

In addition to all the parameters in the Setup menu, the following parameters are also available in the Expert mode:

Direct access

Navigation Expert → Direct access

Description Code for direct access to an operating parameter.

User entry 4-digit code

Submenu "System"

Navigation Expert → System

Save user setup

Navigation Expert → System → Save user setup

Description Select 'Yes' to save the current device settings. The device can be reset to the saved settings by means of 'Reset'->'User reset'.

Options No
Yes

Factory setting No

Submenu "Input"

Navigation Expert → Input

Submenu "Analog in 1"/"Analog in 2"

Navigation	Expert → Input → Analog in 1/Analog in 2
Description	Settings for the analog inputs.
Additional information	The following parameters are available for analog input 1 and analog input 2.

Bar 0%

Navigation	Expert → Input → Analog in 1/Analog in 2 → Bar 0%
Description	Configures the 0%-value for the bar graph
User entry	Numerical value[1)]
Factory setting	0

Bar 100%

Navigation	Expert → Input → Analog in 1/Analog in 2 → Bar 100%
Description	Configures the 100%-value for the bar graph
User entry	Numerical value[1)]
Factory setting	100

Decimal places

Navigation	Expert → Input → Analog in 1/Analog in 2 → Decimal places
Description	Configures the number of decimal places for the display
Options	XXXXX XXXX.X XXX.XX XX.XXX X.XXXX
Factory setting	XXX.XX

Damping

Navigation	Expert → Input → Analog in 1/Analog in 2 → Damping
Description	Configures the damping for the input signal. Entry in steps of 0.1 s from 0.0 s to 999.9 s.
User entry	Numerical value[1)]
Factory setting	0.0 for current / voltage 1.0 for temperature inputs

Failure mode

Navigation	Expert → Input → Analog in 1/Analog in 2 → Failure mode

Description	Configures the failsafe mode.
Options	Invalid Fixed value
Factory settings	Invalid
Additional information	Invalid: an invalid value is output in the event of an error. Fixed value: a fixed value is output in the event of an error.

Fixed fail value

Navigation	Expert → Input → Analog in 1/Analog in 2 → Fixed fail value
Description	The value configured here is output in the event of an error.
User entry	Numerical value[1)]
Factory setting	0
Additional information	Only visible if "Fixed value" was selected for the "Failure mode".

Namur NE 43

Navigation	Expert → Input → Analog in 1/Analog in 2 → Namur NE 43
Description	Setting as to whether the failsafe mode is in accordance with NAMUR NE 43.
Options	On Off
Factory setting	On

Open circ detect

Navigation	Expert → Input → Analog in 1/Analog in 2 → Open circ detect
Description	Sets cable open circuit detection.
Options	On Off
Factory setting	On
Additional information	Only visible if "1-5 V" is configured as the signal range.

Failure delay

Navigation	Expert → Input → Analog in 1/Analog in 2 → Failure delay
Description	Delay time for failure in s
User entry	Integer value (0-99)
Factory setting	0

Allow reset

Navigation	Expert → Input → Analog in 1/Analog in 2 → Allow reset

Description	Setting as to whether saved min./ max. values can be reset in the Display menu without having to enter a user code which may already have been configured.
Options	No Yes
Factory setting	No

Submenu "Output"

Navigation	Expert → Output

Submenu "Analog Out 1"/"Analog Out 2"

Navigation	Expert → Output → Analog Out 1/Analog Out 2
Description	Settings for the analog outputs.
Additional information	The following parameters are available for the analog output 1 and analog output 2.

Failure mode

Navigation	Expert → Output → Analog Out 1/Analog Out 2 → Failure mode
Description	Configures the failsafe mode.
Options	Min Max Fixed value
Factory setting	Min
Additional information	Min: the saved minimum value is output in the event of an error. Max: the saved maximum value is output in the event of an error. Fixed value: a fixed value is output in the event of an error.

Fixed fail value

Navigation	Expert → Output → Analog Out 1/Analog Out 2 → Fixed fail value
Description	The value configured here is output in the event of an error.
User entry	Numerical value[1)]
Factory setting	0
Additional information	Only visible if "Fixed value" was selected for the "Failure mode".

Submenu "Relay 1"/"Relay 2"

Navigation	Expert → Output → Relay 1/Relay 2
Description	Settings for the relays.
Additional information	The following parameters are available for relay 1 and relay 2.

Time delay

Navigation	Expert → Output → Relay 1/Relay 2 → Time delay

Description Delay for switching the relay.
User entry 0-9999
Factory setting 0

Operating mode

Navigation Expert → Output → Relay 1/Relay 2 → Operating mode

Description Normally closed = breaker contact
Normally opened = maker contact
Options normally closed
normally opened
Factory setting normally closed

Failure mode

Navigation Expert → Output → Relay 1/Relay 2 → Failure mode

Description Normally closed = breaker contact
Normally opened = maker contact
Options normally closed
normally opened
Factory setting normally closed

Untermenü "Application"

Navigation Expert → Application

Submenu "Calc value 1"/"Calc value 2"

Navigation Expert → Application → Calc value 1/Calc value 2

Description Settings for the mathematics channels.
Additional information The following parameters are available for math 1 and math 2.

Decimal places

Navigation Expert → Application → Calc value 1/Calc value 2 → Decimal places

Description Configures the number of decimal places for the display
Options XXXXX
XXXX.X
XXX.XX
XX.XXX
X.XXXX
Factory setting XXX.XX

Failure mode

Navigation Expert → Application → Calc value 1/Calc value 2 → Failure mode

Description	Configures the failsafe mode
Options	Invalid Fixed value
Factory setting	Invalid

Fixed fail value

Navigation	Expert → Application → Calc value 1/Calc value 2 → Fixed fail value
Description	The value configured here is output in the event of an error.
User entry	Numerical value[1)]
Factory setting	0
Additional information	Only visible if "Fixed value" was selected for the "Failure mode".

Allow reset

Navigation	Expert → Application → Calc value 1/Calc value 2 → Allow reset
Description	Setting as to whether saved min./ max. values can be reset in the Display menu without having to enter a user code which may already have been configured.
Options	No Yes
Factory setting	No

Submenu "Diagnostics"

Navigation	Expert → Diagnostics

Verify HW set

Navigation	Expert → Diagnostics → Verify HW set
Description	Device hardware check.
Options	Yes No
Factory setting	No

Submenu "Simulation"

Navigation	Expert → Simulation

Simulation AO1/AO2

Navigation	Expert → Simulation → Simulation AO1/Simulation AO1

Description	Simulation of analog output 1 or analog output 2. The value configured in the simulation is output at analog output 1 or analog output 2.
Options	Off 0mA 3.6mA 4mA 10mA 12mA 20mA 21mA 0V 5V 10V
Factory setting	Off

Simu relay 1/2

Navigation	Expert → Simulation → Simu relay 1/Simu relay 2
Description	Simulation of relay 1 or relay 2.
Options	off closed opened
Factory setting	off

1) Numerical values consist of 6 digits where the decimal point counts as a digit, e.g. +99.999

Index

A
Access protection 32
Application conditions
  Configuration 24
Approval guidelines for overfill protection units (ZG-ÜS) 33

C
Cable open circuit detection 37
CE mark 7
CE-mark 8, 54
Configuration
  Access protection 32
  Advanced device configuration 32
  Analog output 28
  Application conditions 24
  Calculations 27
  Code 32
  Differential pressure application 25
  Display functions 33
  Expert 34
  Limit values 28
  Overfill protection 33
  Relay 28
  Setup menu item 26
  Universal input 26
Configuration via PC configuration software 16
Connection 12

D
Declaration of Conformity 7
Delay and hysteresis active 31
Device configuration
  General information 23
  Setup access protection 23
Device reset 38
Diagnosis list 40
Differential pressure application 25
Dimensions 9
Display 18
Display functions 33
Display icons 19
Document
  Function 4
Document function 4

E
Error codes 40
Expert menu 34

F
Failsafe mode 37

H
Hysteresis and delay active 31

I
Icons 19
Incoming acceptance 9
Installation conditions 9

L
Local operation 16

M
Measuring range limits 37
Min/Max memory 37

N
Nameplate 8

O
Operating elements 16
Operating hours counter 38
Operating matrix 20
Operational safety 6
Overfill protection 33

P
Parameter
  Access code 68
  AI1/AI2 Lower range 60
  AI1/AI2 Reset minmax 58
  AI1/AI2 Upper range 60
  Allow reset 72, 75
  Alternating time 59
  Analog in 1/2 58
  Application 59
  Assignment 66
  Bar 0% 64, 71
  Bar 100% 64, 71
  Brightness 59
  Calc value 1/2 59
  Calculation 64
  Connection 62
  Contrast 59
  Current diagn 68
  CV Bar 0% 60
  CV Bar 100% 60
  CV factor 60
  CV unit 60
  Cv1/Cv2 Reset minmax 58
  Damping 71
  Decimal places 71, 74
  Device tag 69
  Diagnostics x 69
  Direct access 70
  ENP Version 70
  Factor 65
  Failure delay 72
  Failure mode 71, 73, 74
  Firmware version 70
  Fixed fail value 72, 73, 75

Fixed ref junc . . . 63
Function . . . 67
Hysteresis . . . 68
Last diagn . . . 69
Lower range . . . 62, 66
Namur NE 43 . . . 72
No lin points . . . 61
No. lin points . . . 65
Offset . . . 63, 65
Open circ detect . . . 72
Operating mode . . . 74
Operating time . . . 69
Order code . . . 69
Order identifier . . . 70
Overfill protect . . . 68
Ref junction . . . 63
Reset . . . 68
Reset min/max . . . 63, 65
Save user setup . . . 70
Serial number . . . 69
Setpoint . . . 67
Setpoint 2 . . . 67
Signal range . . . 62
Signal type . . . 61, 66
Simu relay 1/2 . . . 76
Simulation AO1/AO2 . . . 75
Source . . . 67
Tag . . . 62, 64
Temperature unit . . . 63
Time base . . . 67
Time delay . . . 73
Unit . . . 63, 64
Upper range . . . 62, 66
Verify HW set . . . 75
X-value . . . 65
X-value 1...X-value 32 . . . 61
Y-value . . . 65
Y-value 1...Y-value 32 . . . 61
Post-connection check . . . 15
Product safety . . . 7

Q

Quick pick keys . . . 36

R

Relay
Mode of operation
Gradient . . . 30
Max . . . 29
Min . . . 29
Off . . . 29
Operating mode
InBand . . . 31
OutBand . . . 30
Specification . . . 29
Requirements for personnel . . . 6
Reset . . . 38
Return . . . 44

S

Saving alarms . . . 38
Saving diagnostic events . . . 38
Saving the setup . . . 32
Scope of delivery . . . 8
Self-diagnosis . . . 37
Spare parts . . . 43
Storage . . . 9
Submenu
Analog in 1/2 . . . 61, 71
Analog Out 1/2 . . . 66, 73
Calc value 1/2 . . . 64, 74
Device information . . . 69
Diagnost logbook . . . 69
Diagnostics . . . 75
Input . . . 70
Linearization . . . 61
Output . . . 73
Relay 1/2 . . . 67, 73
Simulation . . . 75
System . . . 68, 70

T

Transport . . . 9
Transportation and storage . . . 9

U

Untermenü
Application . . . 74

W

Workplace safety . . . 6

www.addresses.endress.com

Endress+Hauser

People for Process Automation