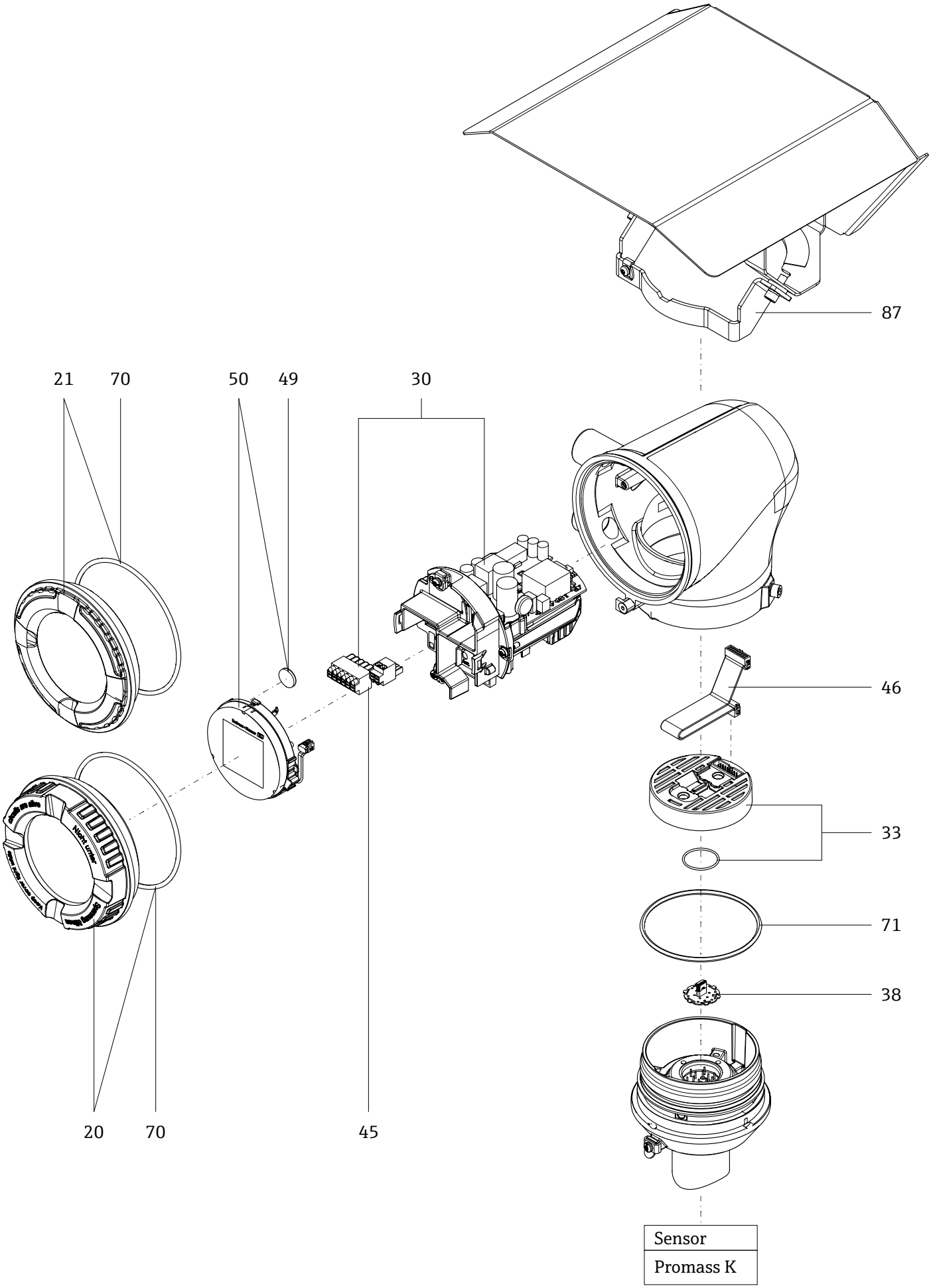
87
21
70
50
49
30
46
33
71
38
20
70
45
Sensor
Promass K