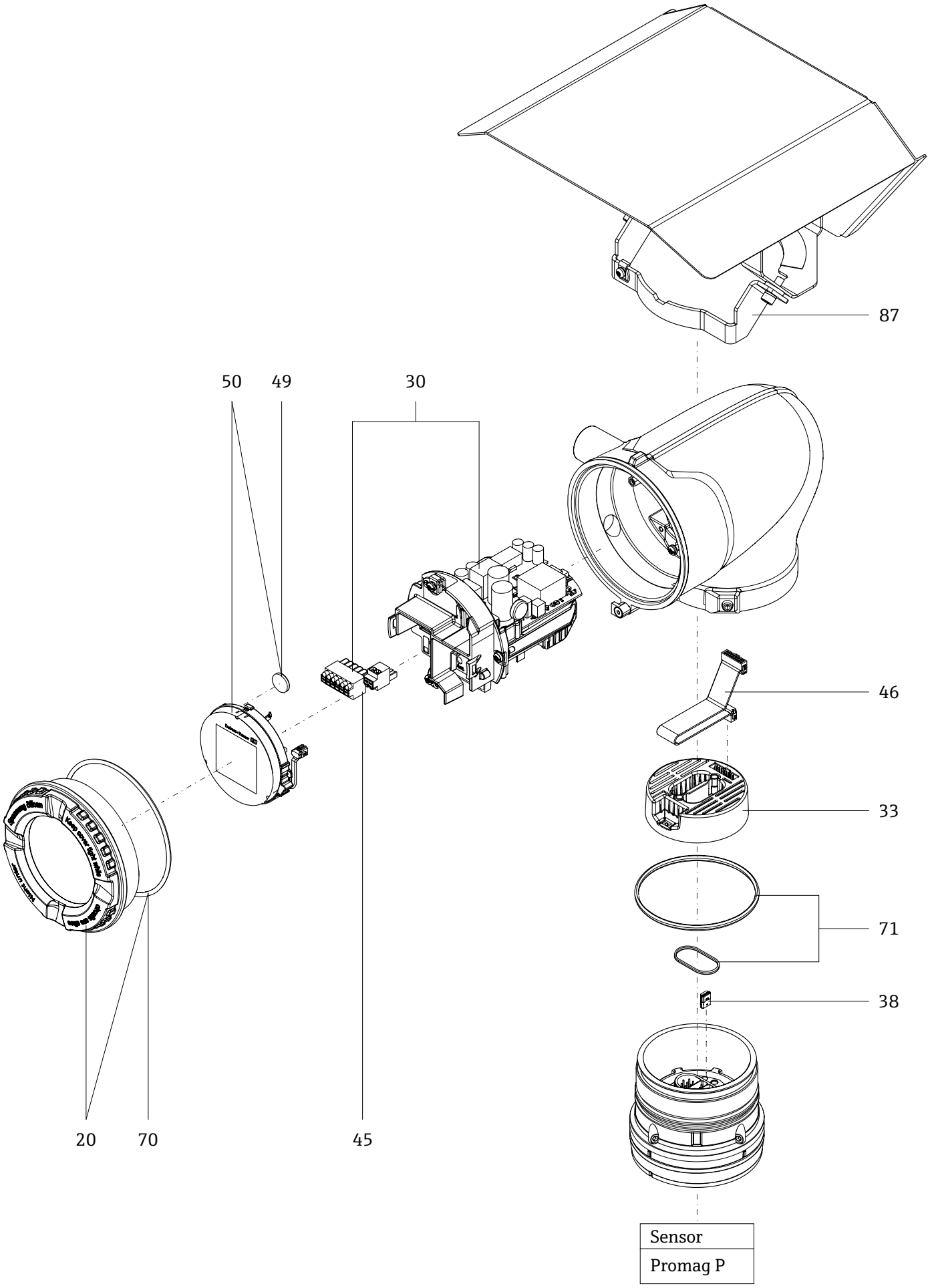
87
50
49
30
46
33
71
38
20
70
45
Sensor
Promag P