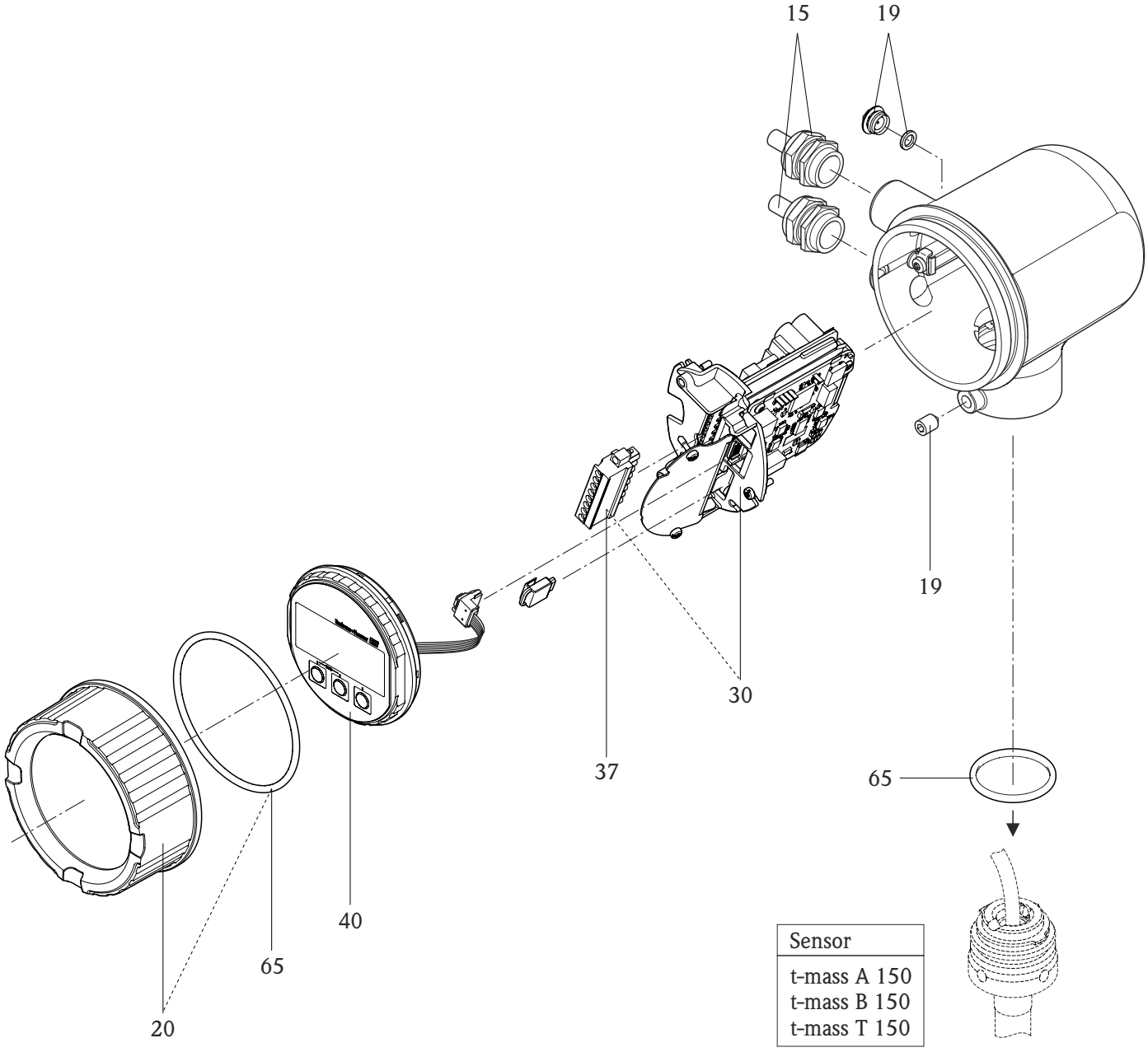

Sensor
t-mass A 150 t-mass B 150 t-mass T 150