LT1100/1200 body

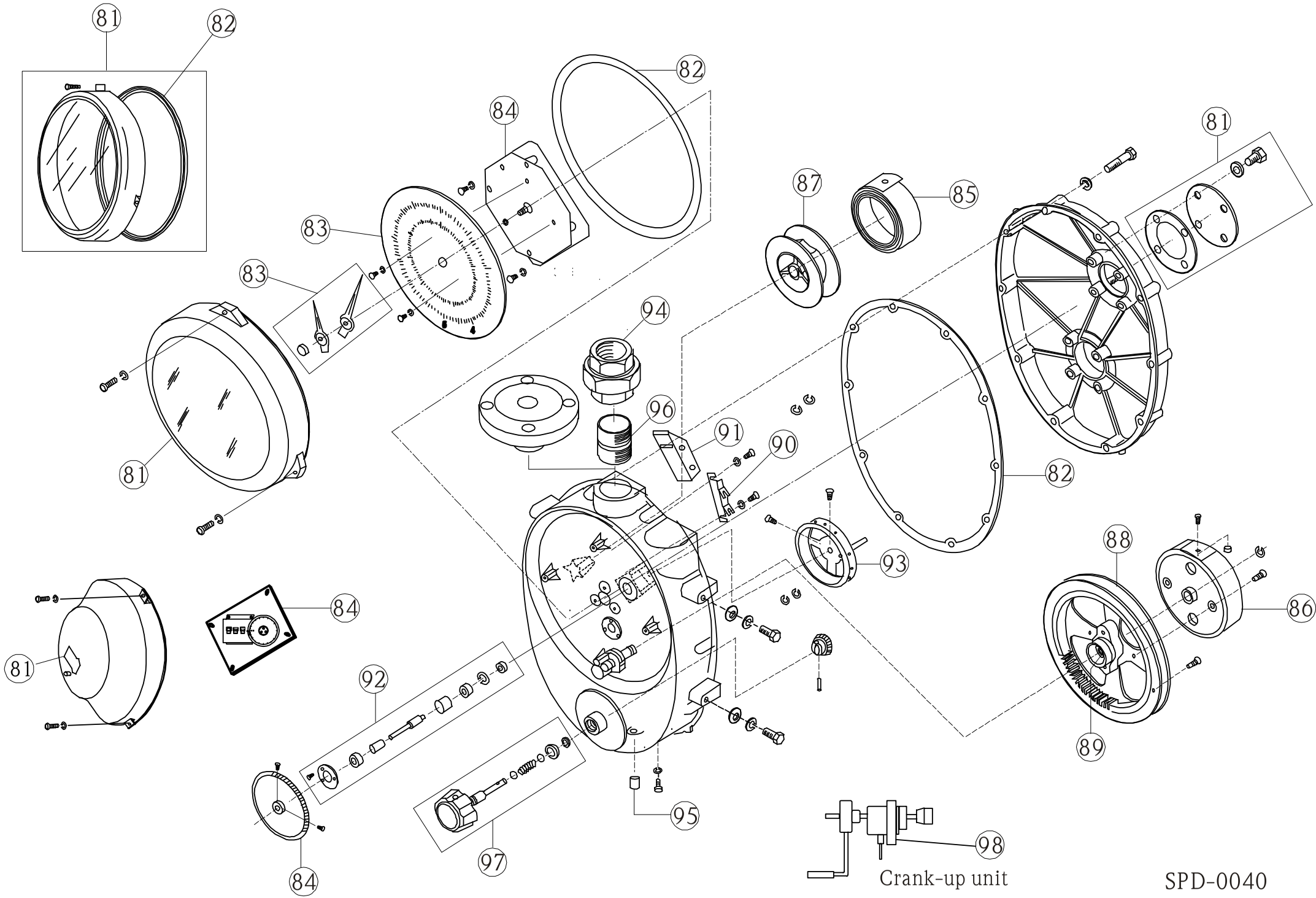

SPD-0040